REV. NO.	C.O. NO.	DESCRIPTION	DATE	BY

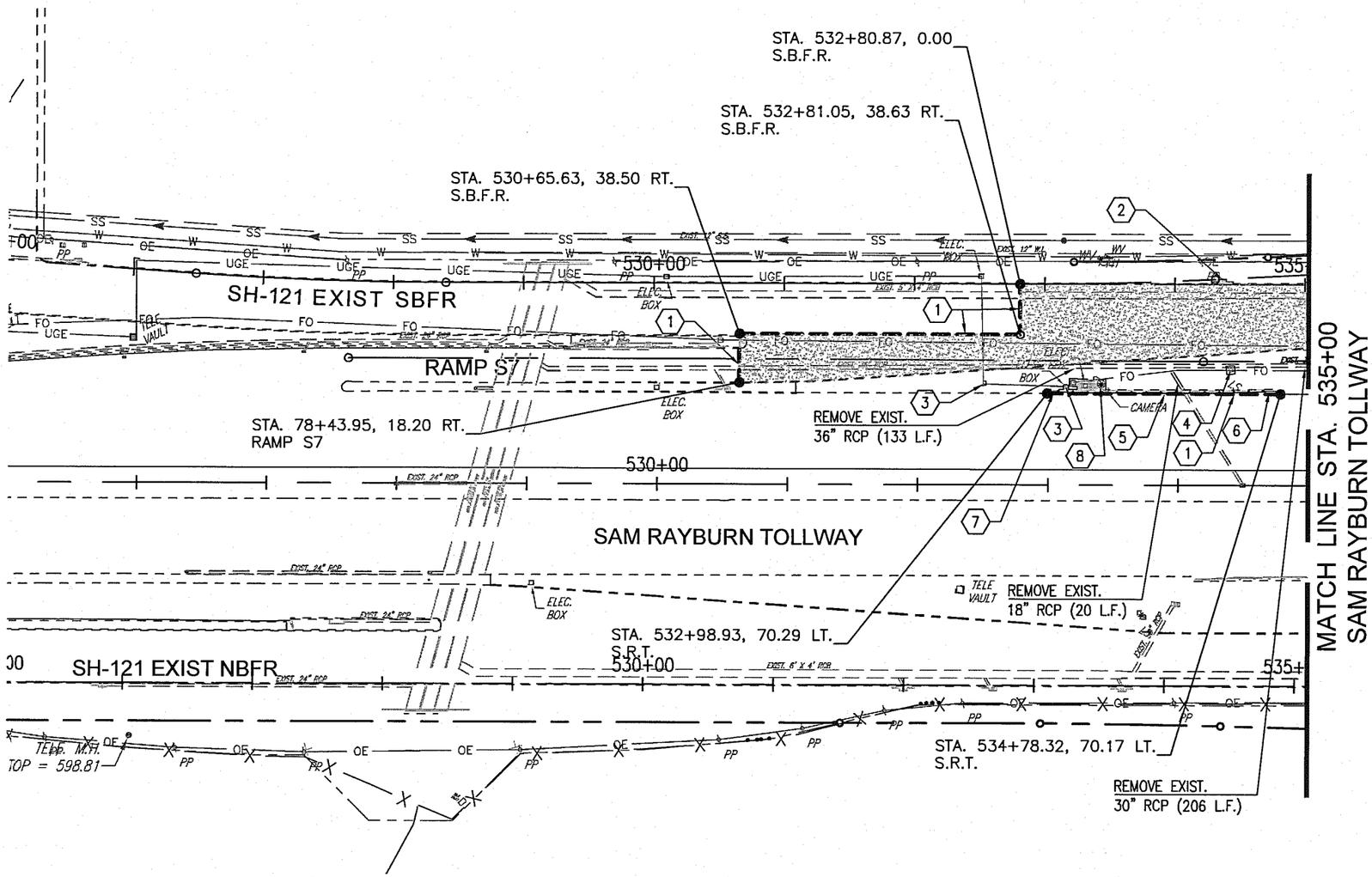

LEGEND

REMOVE EXISTING 10" CONCRETE PAVING WITH 4" HMAC UNDERLAY (CRCP 2,202 S.Y.) (HMAC 2,348 S.Y.)

REMOVE EXISTING CONCRETE RIPRAP (87 S.Y.)

1. FULL DEPTH SAW CUT
2. REMOVE INLET (1 EA)
3. REMOVE GROUND BOX (2 EA)
4. REMOVE EXISTING LIGHT AND FOUNDATION (1 EA)
5. REMOVE EXISTING MBGF (100 L.F.)
6. REMOVE GUARDRAIL END TREATMENT (1 EA)
7. REMOVE GUARDRAIL TERMINAL ANCHOR SECTION (1 EA)
8. RELOCATE CCTV TOWER & EQUIPMENT (SEE ITS PLANS)

GRAPHIC SCALE 1"=100'

0 100 200

STATE OF TEXAS
JOSEPH PERKINS
97522
LICENSED PROFESSIONAL ENGINEER
4/30/13

Graham Associates, Inc.
CONSULTING ENGINEERS & PLANNERS
600 SIX FLAGS DRIVE, SUITE 500
ARLINGTON, TEXAS 76011 (817) 640-8535
TBPE FIRM: F-1191/TBPLS FIRM: 101538-00

© 2013 Texas Department of Transportation

S.H.-121
(SAM RAYBURN TOLLWAY)
AT SOUTH COLONY BLVD

REMOVAL LAYOUT
STA. 525+00 TO STA. 535+00

SHEET 1 OF 4 SHEETS

FED. RD. DIV. NO.	STATE PROJECT NO.		SHEET NO.
6	(SEE TITLE SHEET)		131
STATE	DIST.	COUNTY	
TEXAS	DAL.	DENTON	
CONTROL NO.	SECTION NO.	JOB NO.	HIGHWAY NO.
0364	03	095	S.H.-121

PLOTTED BY: BLAKE BRADLEY
PLOTTED ON: 4/23/2013 1:54 PM
FILE NAME: J:\COLONY\SH-121\CAD\SHEETS\REMOVAL LAYOUT\REMOVAL-LAYOUT-1.DWG

REV. NO.	C.O. NO.	DESCRIPTION	DATE	BY

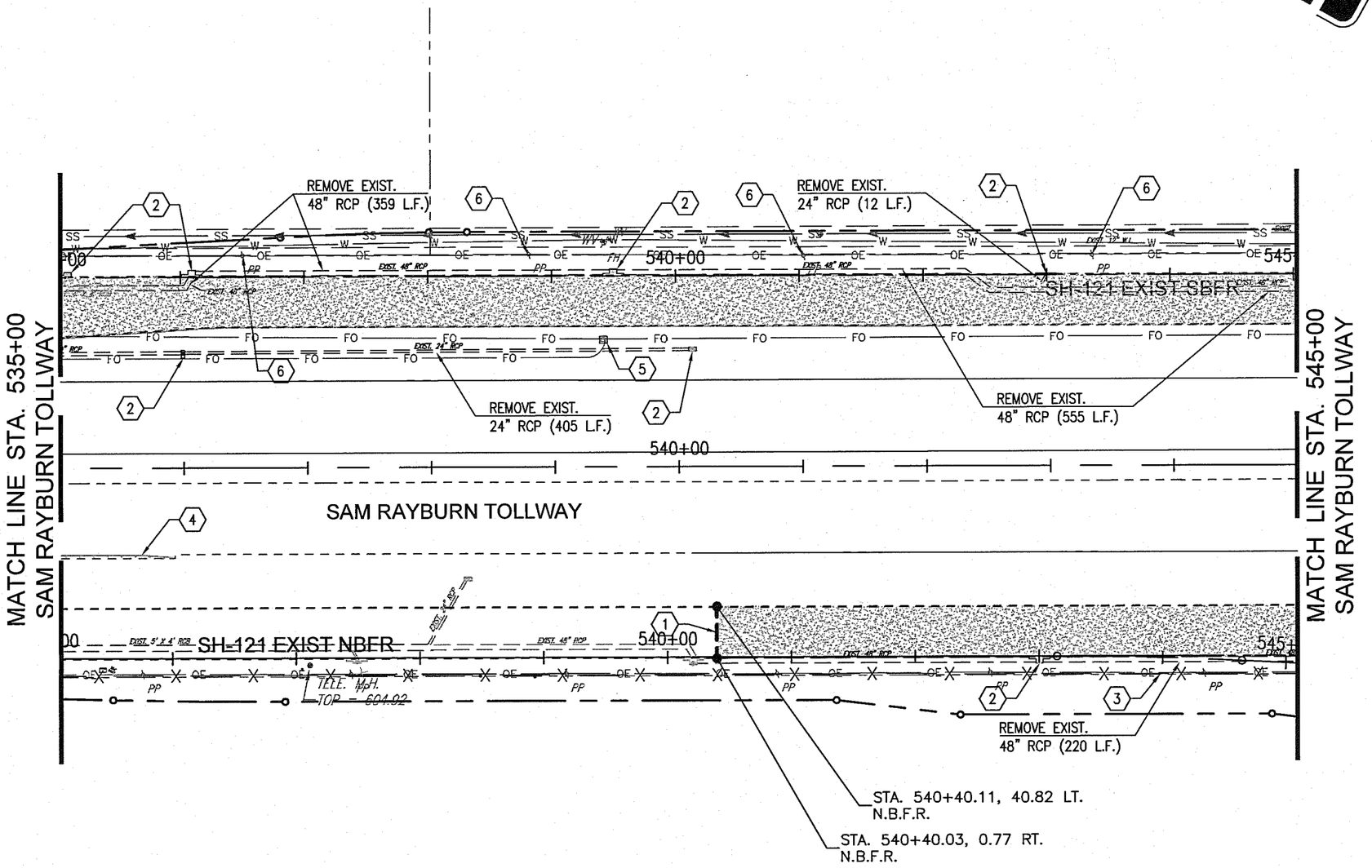

LEGEND

REMOVE EXISTING 10" CONCRETE PAVING WITH 4" HMAC UNDERLAY
(CRCP 6,833 S.Y.)
(HMAC 7,486 S.Y.)

1. FULL DEPTH SAW CUT
2. REMOVE INLET (7 EA)
3. REMOVE TYPE "C" BARBED WIRE FENCE (300 L.F.)
4. REMOVE GUARDRAIL TERMINAL ANCHOR SECTION (1 EA)
5. REMOVE GROUND BOX (1 EA)
6. RELOCATE POWER POLE (BY OTHERS)

GRAPHIC SCALE 1"=100'

0 100 200

STATE OF TEXAS
JOSEPH PERKINS
97522
LICENSED
PROFESSIONAL ENGINEER
4/30/13

Graham Associates, Inc.
CONSULTING ENGINEERS & PLANNERS
600 SIX FLAGS DRIVE, SUITE 500
ARLINGTON, TEXAS 76011 (817) 640-8535
TBPE FIRM: F-1191/TBPLS FIRM: 101538-00

© 2013 Texas Department of Transportation

S.H.-121 (SAM RAYBURN TOLLWAY) AT SOUTH COLONY BLVD

REMOVAL LAYOUT
STA. 535+00 TO STA. 545+00

SHEET 2 OF 4 SHEETS

FED. RD. DIV. NO.	STATE PROJECT NO.		SHEET NO.
6	(SEE TITLE SHEET)		132
STATE	DIST.	COUNTY	
TEXAS	DAL	DENTON	
CONTROL NO.	SECTION NO.	JOB NO.	HIGHWAY NO.
0364	03	095	S.H.-121

PLOTTED BY: BLAKE BRADLEY
PLOTTED ON: 4/24/2013 8:17 AM
FILE NAME: J:\COLONY\SH-121\CAD\SHEETS\REMOVAL LAYOUT\REMOVAL-LAYOUT-2.DWG

REV. NO.	C.O. NO.	DESCRIPTION	DATE	BY

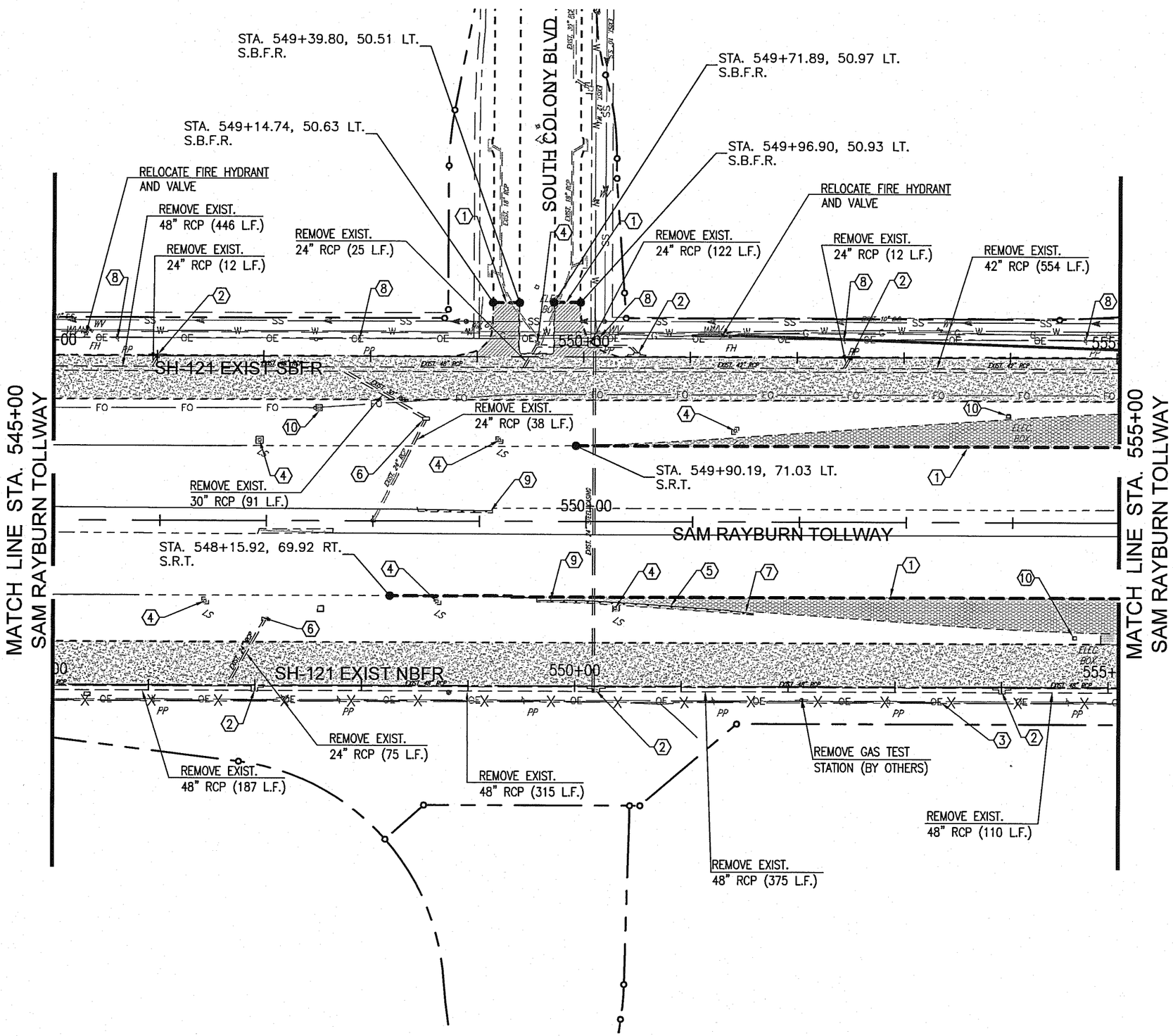

LEGEND

- REMOVE EXISTING 10" CONCRETE PAVING WITH 4" HMAC UNDERLAY (CRCP 9,215 S.Y.)(HMAC 10,104 S.Y.)
- REMOVE EXISTING 13" CONCRETE PAVING WITH 4" HMAC UNDERLAY (CRCP 1,950 S.Y.)(HMAC 2,225 S.Y.)
- REMOVE EXISTING 8" CONCRETE PAVING (355 S.Y.)
- REMOVE EXISTING CONCRETE RIPRAP (92 S.Y.)
- (1) FULL DEPTH SAW CUT
- (2) REMOVE CURB INLET (6 EA)
- (3) REMOVE TYPE "C" BARBED WIRE FENCE (1000 L.F.)
- (4) REMOVE EXISTING LIGHT AND FOUNDATION (7 EA)
- (5) REMOVE EXISTING MBGF (125 L.F.)
- (6) REMOVE EXIST. DROP INLET (2 EA.)
- (7) REMOVE GUARDRAIL TERMINAL ANCHOR SECTION (1 EA)
- (8) RELOCATE POWER POLE (BY OTHERS)
- (9) REMOVE GUARDRAIL END TREATMENT (1 EA)
- (10) REMOVE GROUND BOX (3 EA)

GRAPHIC SCALE 1"=100'

0 100 200

STATE OF TEXAS
JOSEPH PERKINS
97522
LICENSED
PROFESSIONAL ENGINEER
4/30/13

Graham Associates, Inc.
CONSULTING ENGINEERS & PLANNERS
800 SIX FLAGS DRIVE, SUITE 500
ARLINGTON, TEXAS 76011 (817) 640-8535
TBPE FIRM: F-1191/TBPLS FIRM: 101538-00

© 2013 Texas Department of Transportation

S.H. - 121 (SAM RAYBURN TOLLWAY) AT SOUTH COLONY BLVD.

REMOVAL LAYOUT
STA. 545+00 TO STA. 555+00

SHEET 3 OF 4 SHEETS

FED. RD. DIV. NO.	STATE PROJECT NO.		SHEET NO.
6	(SEE TITLE SHEET)		133
STATE	DIST.	COUNTY	
TEXAS	DAL.	DENTON	
CONTROL NO.	SECTION NO.	JOB NO.	HIGHWAY NO.
0364	03	095	S.H.-121

PLOTTED BY: BLAKE BRADLEY
PLOTTED ON: 4/24/2013 6:24 AM
FILE NAME: J:\COLONY\SH-121\CAD\SHEETS\REMOVAL LAYOUT\REMOVAL-LAYOUT-3.DWG

REV. NO.	C.O. NO.	DESCRIPTION	DATE	BY

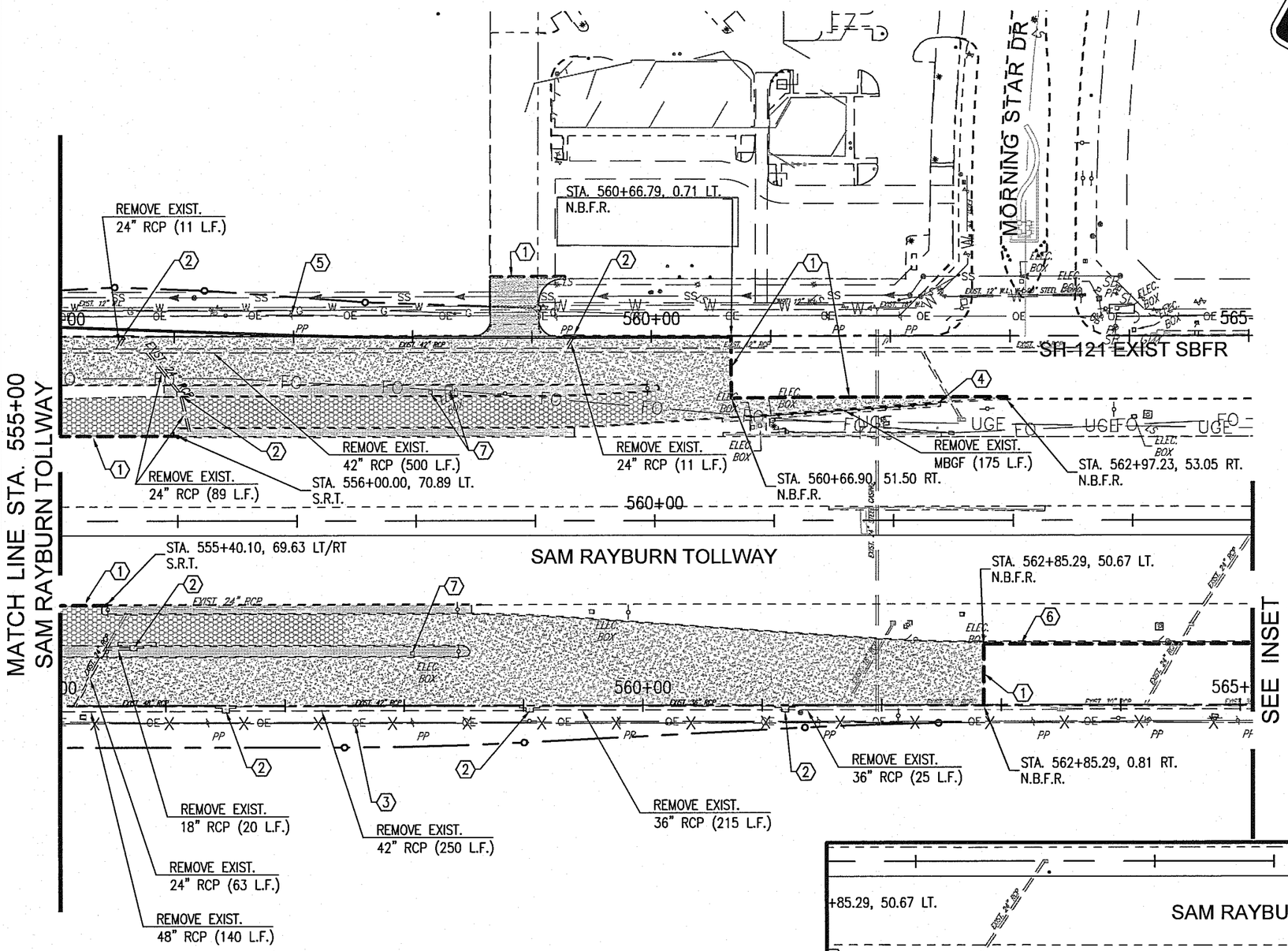

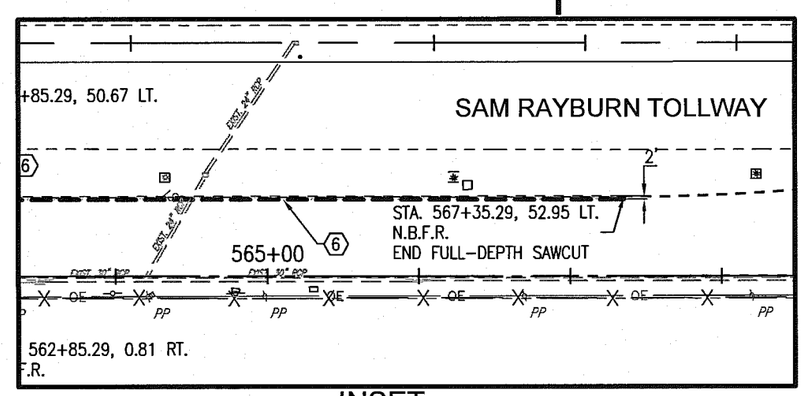

INSET

LEGEND

- REMOVE EXISTING 10" CONCRETE PAVING WITH 4" HMAC UNDERLAY (CRCP 8,161 S.Y.)(HMAC 8,955 S.Y.)
- REMOVE EXISTING 13" CONCRETE PAVING WITH 4" HMAC UNDERLAY (CRCP 2.338 S.Y.)(HMAC 2,641 S.Y.)
- REMOVE EXISTING CONCRETE DRIVEWAY (238 S.Y.)
- REMOVE EXISTING CONCRETE RIPRAP (1,246 S.Y.)
- (1) FULL DEPTH SAW CUT
- (2) REMOVE CURB INLET (7 EA)
- (3) REMOVE TYPE "C" BARBED WIRE FENCE (800 L.F.)
- (4) REMOVE GUARDRAIL END TREATMENT (1 EA)
- (5) RELOCATE POWER POLE (BY OTHERS)
- (6) SAWCUT & REMOVE 24" CONC. CURB & GUTTER (SEE TRAFFIC CONTROL PLANS)
- (7) REMOVE GROUND BOX (3 EA)

GRAPHIC SCALE 1"=100'

0 100 200

STATE OF TEXAS
JOSEPH PERKINS
97522
LICENSED PROFESSIONAL ENGINEER
4/30/13

Graham Associates, Inc.
CONSULTING ENGINEERS & PLANNERS
600 SW FLAGS DRIVE, SUITE 500
ARLINGTON, TEXAS 76011 (817) 640-8535
TBPE FIRM: F-1191/TBPLS FIRM: 101538-00

© 2013 Texas Department of Transportation

S.H.-121 (SAM RAYBURN TOLLWAY) AT SOUTH COLONY BLVD

REMOVAL LAYOUT
STA. 555+00 TO STA. 565+00

SHEET 4 OF 4 SHEETS

FED. RD. DIV. NO.	STATE PROJECT NO.		SHEET NO.
6	(SEE TITLE SHEET)		134
STATE	DIST.	COUNTY	
TEXAS	DAL	DENTON	
CONTROL NO.	SECTION NO.	JOB NO.	HIGHWAY NO.
0364	03	095	S.H.-121

PLOTTED BY: BLAKE BRADLEY
PLOTTED ON: 4/28/2013 5:06 PM
FILE NAME: J:\COLONY\SH-121\CADD\SHEETS\REMOVAL LAYOUT\REMOVAL-LAYOUT-4.DWG

REV. NO.	C.O. NO.	DESCRIPTION	DATE	BY

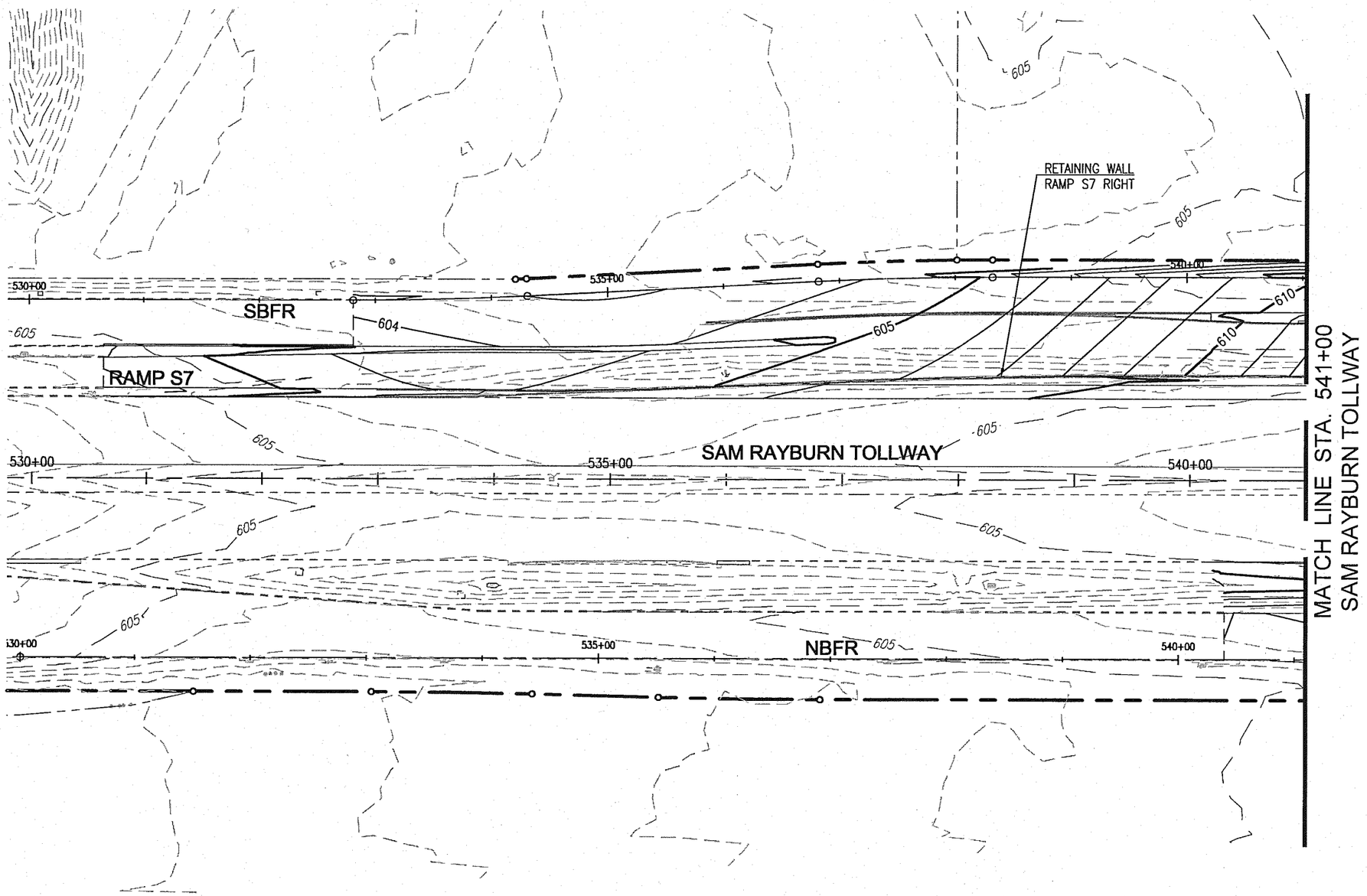

LEGEND

605 — EXISTING 5' CONTOUR

EXISTING 1' CONTOUR

605 — PROPOSED 5' CONTOUR

PROPOSED 1' CONTOUR

GRAPHIC SCALE 1"=100'

0 100 200

STATE OF TEXAS
JOSEPH PERKINS
97522
LICENSED
PROFESSIONAL ENGINEER
3/15/13

Graham Associates, Inc.
CONSULTING ENGINEERS & PLANNERS
600 SIX FLAGS DRIVE, SUITE 500
ARLINGTON, TEXAS 76011 (817) 640-8535
TBPE FIRM: F-1191/TBPLS FIRM: 101538-00

© 2013 Texas Department of Transportation

S.H.-121
(SAM RAYBURN TOLLWAY)
AT SOUTH COLONY BLVD

GRADING PLAN
STA. 530+00 TO STA. 541+00

SHEET 1 OF 3 SHEETS

FED. RD. DIV. NO.	STATE PROJECT NO.		SHEET NO.
6	(SEE TITLE SHEET)		135
STATE	DIST.	COUNTY	
TEXAS	DAL	DENTON	
CONTROL NO.	SECTION NO.	JOB NO.	HIGHWAY NO.
0364	03	095	S.H.-121

PLOTTED BY: JOE PERKINS
PLOTTED ON: 3/9/2013 2:58 PM
FILE NAME: J:\COLONY\SH-121\CAD\SHEETS\GRADING SHEET 1.DWG
SHEET SIZE: 11" X 17" 1' = 1'

REV. NO.	C.O. NO.	DESCRIPTION	DATE	BY

LEGEND

605 — EXISTING 5' CONTOUR

EXISTING 1' CONTOUR

605 — PROPOSED 5' CONTOUR

PROPOSED 1' CONTOUR

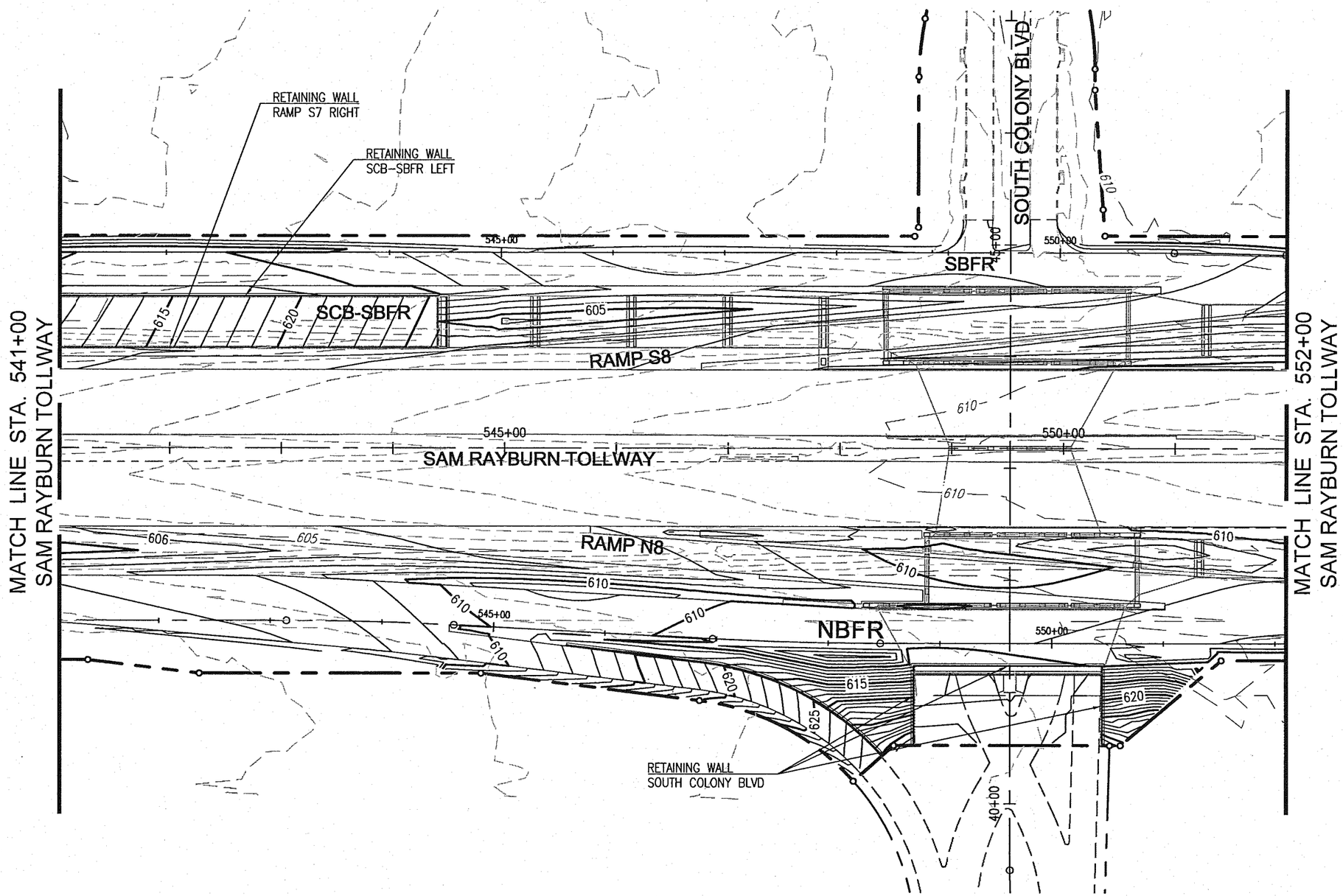

GRAPHIC SCALE 1"=10'

0 10 20

STATE OF TEXAS
JOSEPH PERKINS
97522
LICENSED
PROFESSIONAL ENGINEER
3/15/13

Graham Associates, Inc.
CONSULTING ENGINEERS & PLANNERS
600 SIX FLAGS DRIVE, SUITE 500
ARLINGTON, TEXAS 76011 (817) 640-8535
TBPE FIRM: F-1191/TBPLS FIRM: 101538-00

© 2013 Texas Department of Transportation

S.H.-121
(SAM RAYBURN TOLLWAY)
AT SOUTH COLONY BLVD

GRADING PLAN
STA. 541+00 TO STA. 552+00

SHEET 2 OF 3 SHEETS

FED. RD. DIV. NO.	STATE PROJECT NO.		SHEET NO.
6	(SEE TITLE SHEET)		136
STATE	DIST.	COUNTY	
TEXAS	DAL	DENTON	
CONTROL NO.	SECTION NO.	JOB NO.	HIGHWAY NO.
0364	03	095	S.H.-121

PLOTTED BY: JOE PERKINS
PLOTTED ON: 3/9/2013 3:01 PM
FILE NAME: J:\COLONY\SH-121\CAD\SHEETS\GRADING SHEET 2.DWG
SHEET SIZE: 11" X 17" 1' = 1'

REV. NO.	C.O. NO.	DESCRIPTION	DATE	BY

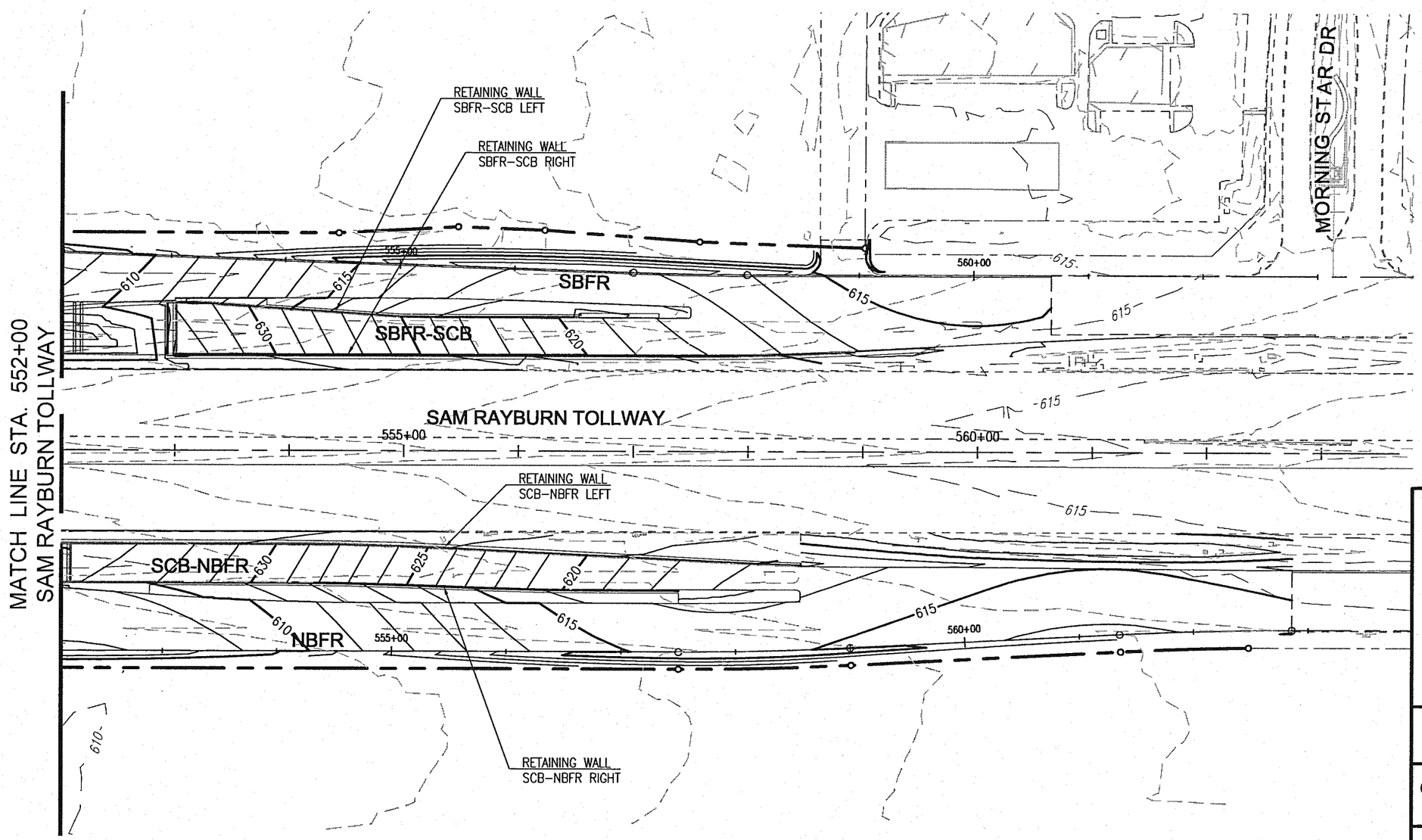

LEGEND

605 — EXISTING 5' CONTOUR

EXISTING 1' CONTOUR

605 — PROPOSED 5' CONTOUR

PROPOSED 1' CONTOUR

GRAPHIC SCALE 1"=100'

0 100 200

STATE OF TEXAS
JOSEPH PERKINS
97522
LICENSED
PROFESSIONAL ENGINEER
3/11/13

Graham Associates, Inc.
CONSULTING ENGINEERS & PLANNERS
600 SIX FLAGS DRIVE, SUITE 500
ARLINGTON, TEXAS 76011 (817) 640-8535
TBPE FIRM: F-1191/TBPLS FIRM: 101538-00

© 2013 Texas Department of Transportation

S.H.-121
(SAM RAYBURN TOLLWAY)
AT SOUTH COLONY BLVD

GRADING PLAN
STA. 552+00 TO STA. 564+00

SHEET 3 OF 3 SHEETS

FED. RD. DIV. NO.	STATE PROJECT NO.		SHEET NO.
6	(SEE TITLE SHEET)		137
STATE	DIST.	COUNTY	
TEXAS	DAL	DENTON	
CONTROL NO.	SECTION NO.	JOB NO.	HIGHWAY NO.
0364	03	095	S.H.-121

PLOTTED BY: JOE PERKINS
PLOTTED ON: 3/9/2013 3:04 PM
FILE NAME: J:\COLONY\SH-121\CAD\SHEETS\GRADING SHEET 3.DWG
SHEET SIZE: 11" X 17" 1' = 1'

REV. NO.	C.O. NO.	DESCRIPTION	DATE	BY

LEGEND

- 13" CRCP, 4" TYPE "B" D-GR HMA UNDERLAYMENT LIME TREATED SUBGRADE
- 10" CRCP, 4" TYPE "B" D-GR HMA UNDERLAYMENT LIME TREATED SUBGRADE
- 4" CONCRETE RIP-RAP

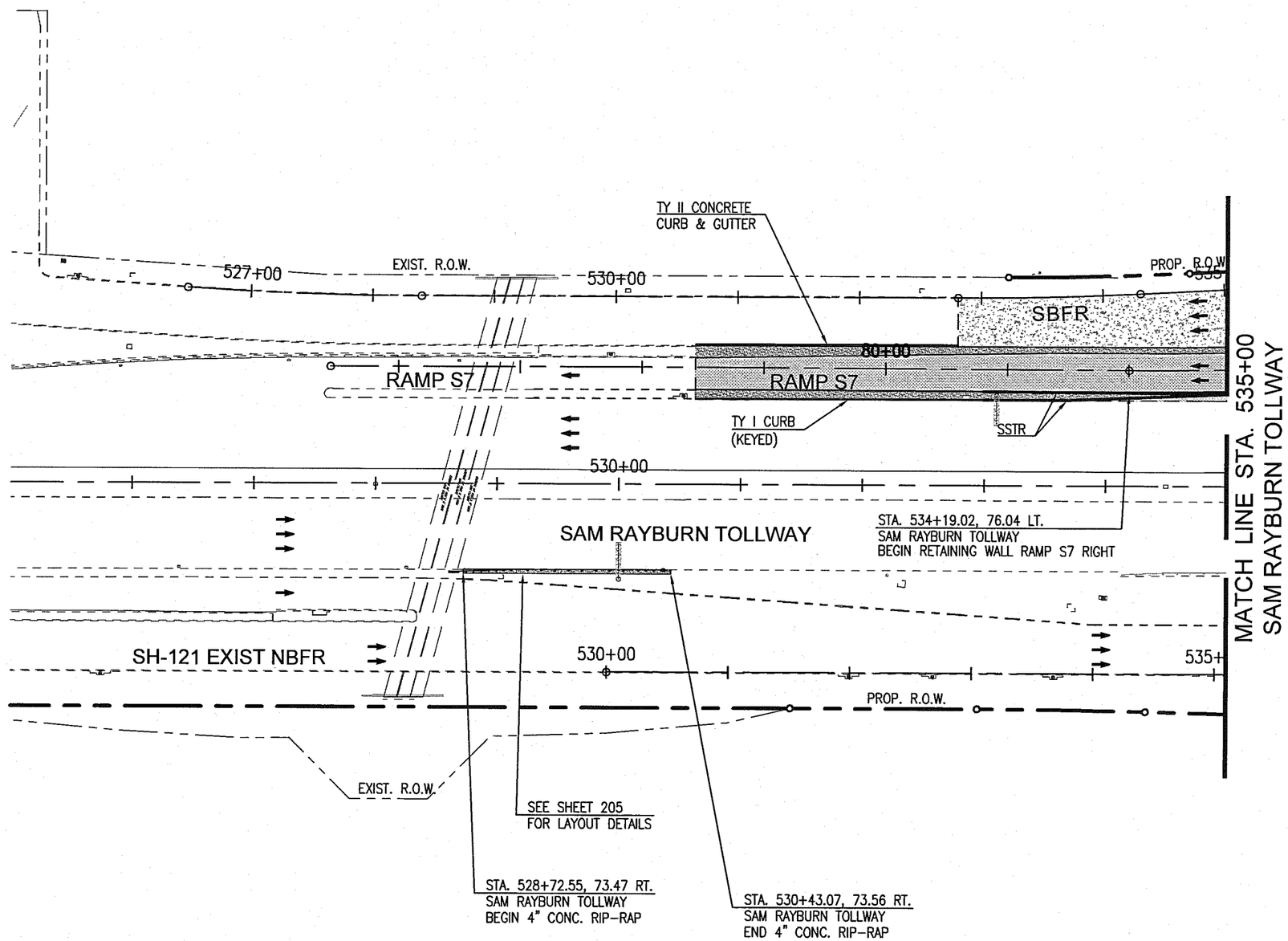

GRAPHIC SCALE 1"=100'

0 100 200

STATE OF TEXAS
JOSEPH PERKINS
97522
LICENSED
PROFESSIONAL ENGINEER
4/30/13

Graham Associates, Inc.
CONSULTING ENGINEERS & PLANNERS
600 SIX FLAGS DRIVE, SUITE 500
ARLINGTON, TEXAS 76011 (817) 640-8535
TBPE FIRM: F-1191/TBPLS FIRM: 101538-00

© 2013 Texas Department of Transportation

S.H.-121 (SAM RAYBURN TOLLWAY) AT SOUTH COLONY BLVD

PAVING LAYOUT
STA. 525+00 TO STA. 535+00

SHEET 1 OF 4 SHEETS

FED. RD. DIV. NO.	STATE PROJECT NO.		SHEET NO.
6	(SEE TITLE SHEET)		138
STATE	DIST.	COUNTY	
TEXAS	DAL	DENTON	
CONTROL NO.	SECTION NO.	JOB NO.	HIGHWAY NO.
0364	03	095	S.H.-121

PLOTTED BY: BLAKE BRADLEY
PLOTTED ON: 4/12/2013 11:18 AM
FILE NAME: J:\COLONY\SH-121\CAD\SHEETS\PAVING SHEETS\PAVING-LAYOUT-1.DWG

REV. NO.	C.O. NO.	DESCRIPTION	DATE	BY

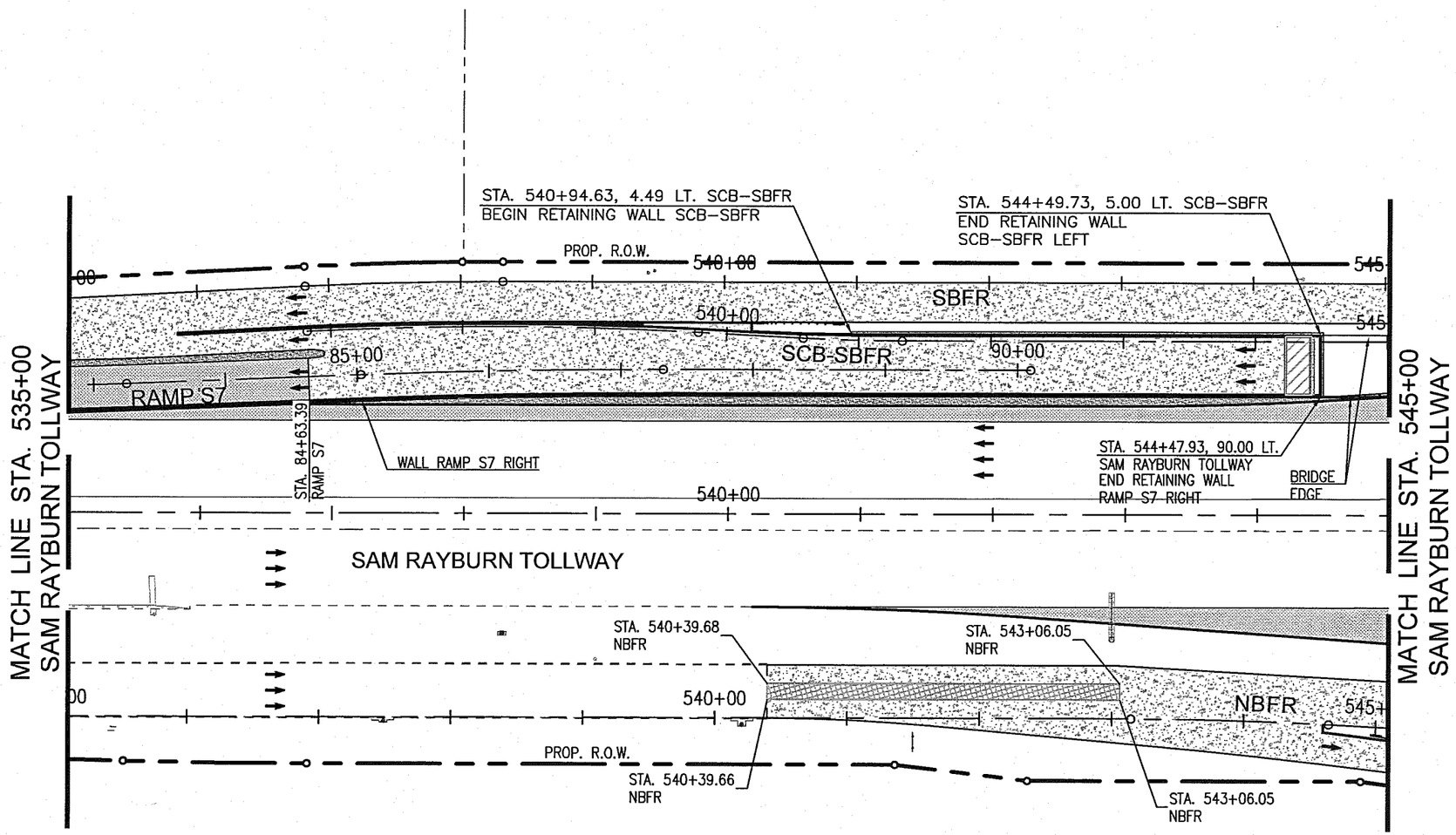

LEGEND

- 13" CRCP, 4" TYPE "B" D-GR HMA UNDERLAYMENT LIME TREATED SUBGRADE
- 10" CRCP, 4" TYPE "B" D-GR HMA UNDERLAYMENT LIME TREATED SUBGRADE
- BRIDGE APPROACH SLAB
- 4" CONCRETE RIP-RAP
- 10" CONC. PAV. (HES), 12" FLEX. BASE (TY D, GR 1)

GRAPHIC SCALE 1"=100'

0 100 200

STATE OF TEXAS
JOSEPH PERKINS
97522
LICENSED
PROFESSIONAL ENGINEER
4/30/13

Graham Associates, Inc.
CONSULTING ENGINEERS & PLANNERS
600 SIX FLAGS DRIVE, SUITE 500
ARLINGTON, TEXAS 76011 (817) 640-8535
TBPE FIRM: F-1191/TBPLS FIRM: 10153B-00

© 2013 Texas Department of Transportation

S.H.-121 (SAM RAYBURN TOLLWAY) AT SOUTH COLONY BLVD

PAVING LAYOUT
STA. 535+00 TO STA. 545+00

SHEET 2 OF 4 SHEETS

FED. RD. DIV. NO.	STATE PROJECT NO.		SHEET NO.
6	(SEE TITLE SHEET)		139
STATE	DIST.	COUNTY	
TEXAS	DAL	DENTON	
CONTROL NO.	SECTION NO.	JOB NO.	HIGHWAY NO.
0364	03	095	S.H.-121

PLOTTED BY: BLAKE BRADLEY
PLOTTED ON: 4/23/2013 4:10 PM
FILE NAME: J:\COLONY\SH-121\CAD\SHEETS\PAVING SHEETS\PAVING-LAYOUT-2.DWG

REV. NO.	C.O. NO.	DESCRIPTION	DATE	BY

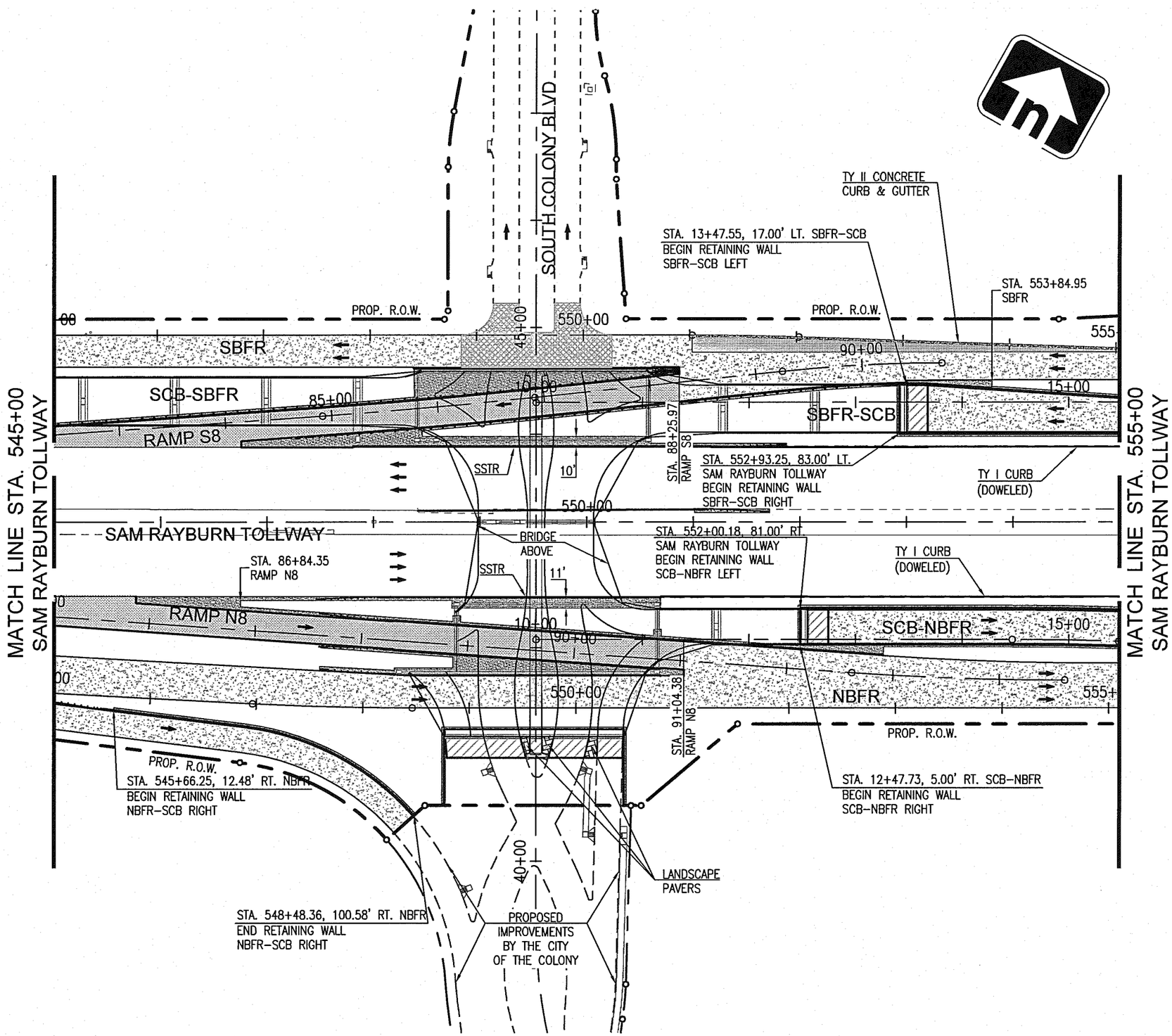

LEGEND

- 13" CRCP, 4" TYPE "B" D-GR HMA UNDERLAYMENT LIME TREATED SUBGRADE
- 10" CRCP, 4" TYPE "B" D-GR HMA UNDERLAYMENT LIME TREATED SUBGRADE
- BRIDGE APPROACH SLAB
- 4" CONCRETE RIPRAP
- 2" TYPE "C", 8" TYPE "B" HMAC LIME TREATED SUBGRADE.
- LANDSCAPE PAVERS
- 10" CONC. PAV. (HES), 12" FLEX. BASE (TY D)

GRAPHIC SCALE 1"=100'

0 100 200

STATE OF TEXAS
JOSEPH PERKINS
97522
LICENSED
PROFESSIONAL ENGINEER
4/30/13

Graham Associates, Inc.
CONSULTING ENGINEERS & PLANNERS
600 SIX FLAGS DRIVE, SUITE 500
ARLINGTON, TEXAS 76011 (817) 640-8535
TBPE FIRM: F-1191/TBPLS FIRM: 101538-00

© 2013 Texas Department of Transportation

S.H.-121 (SAM RAYBURN TOLLWAY) AT SOUTH COLONY BLVD

PAVING LAYOUT
STA. 545+00 TO STA. 555+00

SHEET 3 OF 4 SHEETS

FED. RD. DIV. NO.	STATE PROJECT NO.		SHEET NO.
6	(SEE TITLE SHEET)		140
STATE	DIST.	COUNTY	
TEXAS	DAL	DENTON	
CONTROL NO.	SECTION NO.	JOB NO.	HIGHWAY NO.
0364	03	095	S.H.-121

PLOTTED BY: SCOTT YOUNG
PLOTTED ON: 4/23/2013 2:45 PM
FILE NAME: J:\COLONY\SH-121\CAD\SHEETS\PAVING SHEETS\PAVING-LAYOUT-3.DWG

REV. NO.	C.O. NO.	DESCRIPTION	DATE	BY

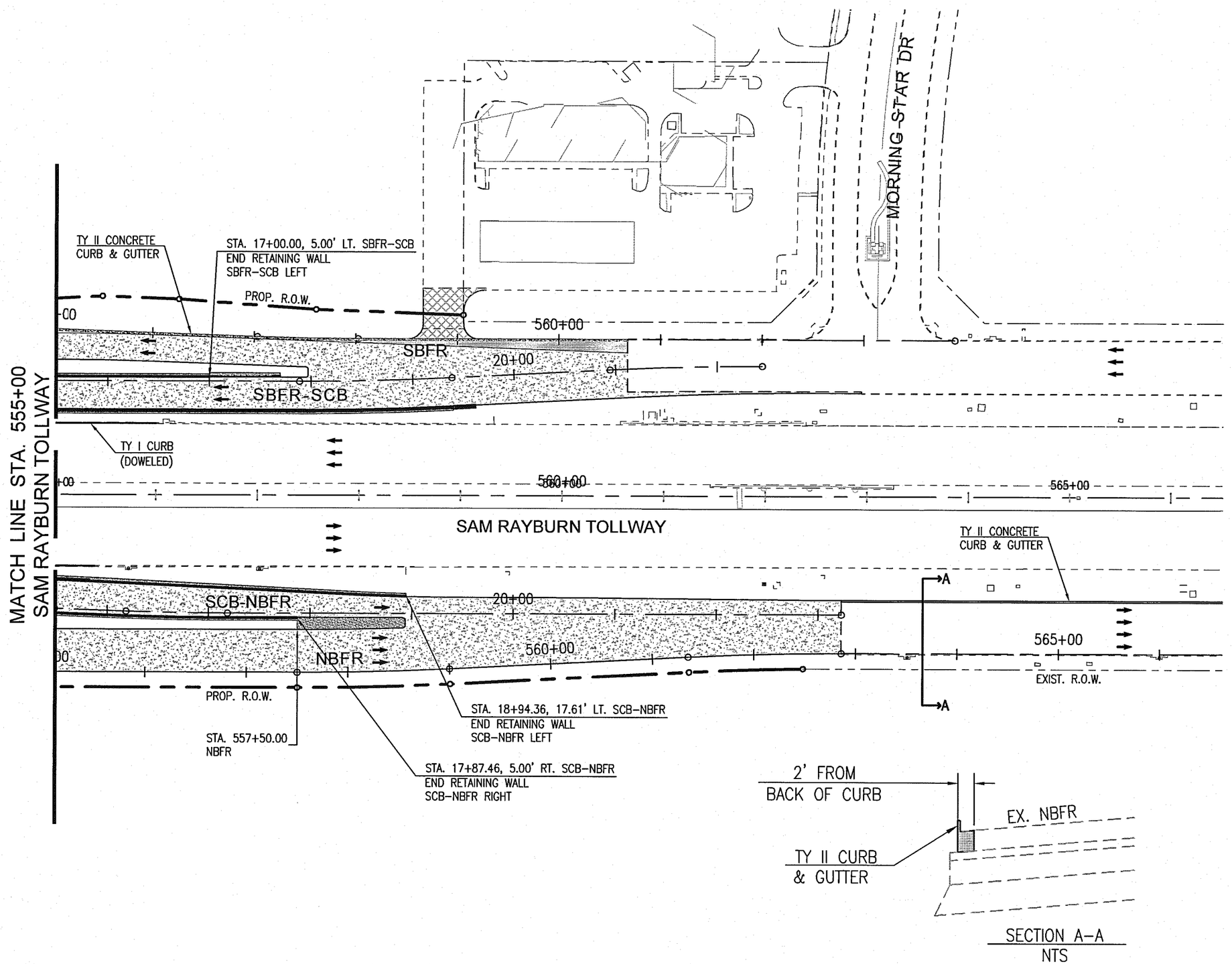

LEGEND

- 10" CRCP, TYPE "B"
  D-GR HMA UNDERLAYMENT
  LIME TREATED SUBGRADE
- 6" CONCRETE DRIVE
  1" SAND CUSHION
- 4" CONCRETE RIP-RAP
- 2" TYPE "C", 8" TYPE "B" HMAC
  LIME TREATED SUBGRADE

GRAPHIC SCALE 1"=100'

0 100 200

STATE OF TEXAS
JOSEPH PERKINS
97522
LICENSED
PROFESSIONAL ENGINEER
4/30/13

Graham Associates, Inc.
CONSULTING ENGINEERS & PLANNERS
600 SIX FLAGS DRIVE, SUITE 500
ARLINGTON, TEXAS 76011 (817) 640-8535
TBPE FIRM: F-1191/TBPLS FIRM: 101538-00

© 2013 Texas Department of Transportation

S.H.-121
(SAM RAYBURN TOLLWAY)
AT SOUTH COLONY BLVD

PAVING LAYOUT
STA. 555+00 TO STA. 565+00

SHEET 4 OF 4 SHEETS

FED. RD. DIV. NO.	STATE PROJECT NO.		SHEET NO.
6	(SEE TITLE SHEET)		141
STATE	DIST.	COUNTY	
TEXAS	DAL	DENTON	
CONTROL NO.	SECTION NO.	JOB NO.	HIGHWAY NO.
0364	03	095	S.H.-121

PLOTTED BY: SCOTT YOUNG
PLOTTED ON: 4/23/2013 3:04 PM
FILE NAME: J:\COLONY\SH-121\CAD\SHEETS\PAVING SHEETS\PAVING-LAYOUT-4.DWG

REV. NO.	C.O. NO.	DESCRIPTION	DATE	BY

SOUTHBOUND FRONTAGE ROAD

Description:

CURVE C-3

Curve Point Data

Description	Station	Northing	Easting
PC:	526+48.05	7078583.5554	2467424.3878
PI:	527+44.10	7078624.7189	2467511.2130
PT:	528+40.16	7078671.6077	2467595.0850

Circular Curve Data

Parameter	Value	Parameter	Value
Delta:	03°50'31.27"	Type:	LEFT
Radius:	2864.8580	DOC:	01°59'59.83"
Length:	192.1056	Tangent:	96.0888
Mid-Crd:	1.6101	External:	1.6110
Chord:	192.0697	Course:	N 62°42'48.71" E

Tangent Data

Description	Station	Northing	Easting
Start:	528+40.16	7078671.6077	2467595.0850
End:	532+80.87	7078886.6654	2467979.7675

Tangent Data

Parameter	Value	Parameter	Value
Length:	440.7158	Course:	N 60°47'33.08" E

CURVE C-4

Curve Point Data

Description	Station	Northing	Easting
PC:	532+80.87	7078886.6654	2467979.7675
PI:	533+55.87	7078923.2718	2468045.2468
PT:	534+30.87	7078963.2549	2468108.7206

Circular Curve Data

Parameter	Value	Parameter	Value
Delta:	03°00'00.00"	Type:	LEFT
Radius:	2864.7900	DOC:	02°00'00.00"
Length:	150.0000	Tangent:	75.0172
Mid-Ord:	0.9817	External:	0.9820
Chord:	149.9829	Course:	N 59°17'33.08" E

Tangent Data

Description	Station	Northing	Easting
Start:	534+30.87	7078963.2549	2468108.7206
End:	536+82.09	7079097.1486	2468321.2786

Tangent Data

Parameter	Value	Parameter	Value
Length:	251.2139	Course:	N 57°47'33.08" E

CURVE C-5

Curve Point Data

Description	Station	Northing	Easting
PC:	536+82.09	7079097.1486	2468321.2786
PI:	537+57.09	7079137.1318	2468384.7524
PT:	538+32.09	7079173.7382	2468450.2318

Circular Curve Data

Parameter	Value	Parameter	Value
Delta:	03°00'00.00"	Type:	RIGHT
Radius:	2864.7900	DOC:	02°00'00.00"
Length:	150.0001	Tangent:	75.0172
Mid-Ord:	0.9817	External:	0.9820
Chord:	149.9829	Course:	N 59°17'33.08" E

SOUTHBOUND FRONTAGE ROAD (CON'T.)

Description:

Tangent Data

Description	Station	Northing	Easting
Start:	538+32.09	7079173.7382	2468450.2318
End:	551+02.21	7079793.5231	2469558.8665

Tangent Data

Parameter	Value	Parameter	Value
Length:	1270.1198	Course:	N 60°47'33.08" E

CURVE C-6

Curve Point Data

Description	Station	Northing	Easting
PC:	551+02.21	7079793.5231	2469558.8665
PI:	551+52.21	7079817.9243	2469602.5139
PT:	552+02.21	7079840.7873	2469646.9862

Circular Curve Data

Parameter	Value	Parameter	Value
Delta:	02°00'00.00"	Type:	RIGHT
Radius:	2864.7900	DOC:	02°00'00.00"
Length:	100.0000	Tangent:	50.0051
Mid-Ord:	0.4363	External:	0.4364
Chord:	99.9950	Course:	N 61°47'33.08" E

Tangent Data

Description	Station	Northing	Easting
Start:	552+02.21	7079840.7873	2469646.9862
End:	557+03.21	7080069.8552	2470092.5611

Tangent Data

Parameter	Value	Parameter	Value
Length:	501.0081	Course:	N 62°47'33.08" E

CURVE C-7

Curve Point Data

Description	Station	Northing	Easting
PC:	557+03.21	7080069.8552	2470092.5611
PI:	557+52.78	7080092.5193	2470136.6465
PT:	558+02.34	7080116.6950	2470179.9214

Circular Curve Data

Parameter	Value	Parameter	Value
Delta:	01°58'57.36"	Type:	LEFT
Radius:	2864.7900	DOC:	02°00'00.00"
Length:	99.1300	Tangent:	49.5699
Mid-Ord:	0.4288	External:	0.4288
Chord:	99.1250	Course:	N 61°48'04.40" E

Tangent Data

Description	Station	Northing	Easting
Start:	558+02.34	7080116.6950	2470179.9214
End:	563+89.74	7080403.1710	2470692.7185

Tangent Data

Parameter	Value	Parameter	Value
Length:	587.3920	Course:	N 60°48'35.72" E

SOUTHBOUND ENTRANCE RAMP S7

Description:

Tangent Data

Description	Station	Northing	Easting
Start:	75+43.97	7078584.5875	2467558.2874
End:	78+44.02	7078731.2622	2467820.0448

Tangent Data

Parameter	Value	Parameter	Value
Length:	300.0507	Course:	N 60°44'09.88" E

Tangent Data

Description	Station	Northing	Easting
Start:	78+44.02	7078731.2622	2467820.0448
End:	82+00.36	7078904.0470	2468131.6930

Tangent Data

Parameter	Value	Parameter	Value
Length:	356.3414	Course:	N 60°59'42.10" E

CURVE C-8

Curve Point Data

Description	Station	Northing	Easting
PC:	82+00.36	7078904.0470	2468131.6930
PI:	82+62.69	7078934.2737	2468186.2123
PT:	83+25.02	7078966.8433	2468239.3651

Circular Curve Data

Parameter	Value	Parameter	Value
Delta:	02°29'35.22"	Type:	LEFT
Radius:	2864.7900	DOC:	02°00'00.00"
Length:	124.6559	Tangent:	62.3378
Mid-Ord:	0.6780	External:	0.6782
Chord:	124.6461	Course:	N 59°44'54.49" E

Tangent Data

Description	Station	Northing	Easting
Start:	83+25.02	7078966.8433	2468239.3651
End:	85+03.02	7079059.8435	2468391.1390

Tangent Data

Parameter	Value	Parameter	Value
Length:	178.0010	Course:	N 58°30'06.88" E

CURVE C-9

Curve Point Data

Description	Station	Northing	Easting
PC:	85+03.02	7079059.8435	2468391.1390
PI:	86+17.55	7079119.6903	2468488.8073
PT:	87+32.08	7079175.5856	2468588.7896

Circular Curve Data

Parameter	Value	Parameter	Value
Delta:	02°17'26.20"	Type:	RIGHT
Radius:	5729.5800	DOC:	01°00'00.00"
Length:	229.0611	Tangent:	114.5458
Mid-Ord:	1.1447	External:	1.1449
Chord:	229.0458	Course:	N 59°38'49.98" E

Tangent Data

Description	Station	Northing	Easting
Start:	87+32.08	7079175.5856	2468588.7896
End:	90+09.72	7079311.0649	2468831.1269

Tangent Data

Parameter	Value	Parameter	Value
Length:	277.6365	Course:	N 60°47'33.08" E

STATE OF TEXAS
JOSEPH PERKINS
97522
LICENSED
PROFESSIONAL ENGINEER
3/15/13

Graham Associates, Inc.
CONSULTING ENGINEERS & PLANNERS
600 SIX FLAGS DRIVE, SUITE 500
ARLINGTON, TEXAS 76011 (817) 640-8535
TBPE FIRM: F-1191/TBPLS FIRM: 101538-00

© 2013 Texas Department of Transportation

S.H.-121 (SAM RAYBURN TOLLWAY) AT SOUTH COLONY BLVD

BASELINE CONTROL
SBFR, RAMP S7

SHEET 1 OF 4 SHEETS

FED. RD. DIV. NO.	STATE PROJECT NO.		SHEET NO.
6	(SEE TITLE SHEET)		142
STATE	DIST.	COUNTY	
TEXAS	DAL	DENTON	
CONTROL NO.	SECTION NO.	JOB NO.	HIGHWAY NO.
0364	03	095	S.H.-121

REV. NO.	C.O. NO.	DESCRIPTION	DATE	BY

NORTHBOUND FRONTAGE ROAD

Description:

Tangent Data

Description	Station	Northing	Easting
Start:	530+00.00	7078477.4342	2467878.9398
End:	543+14.39	7079118.8202	2469026.2137

Tangent Data

Parameter	Value	Parameter	Value
Length:	1314.3871	Course:	N 60° 47'33.11" E

CURVE C-10

Curve Point Data

Description	Station	Northing	Easting
PC:	543+14.39	7079118.8202	2469026.2137
PI:	543+89.39	7079155.4264	2469091.6928
PT:	544+64.39	7079188.5555	2469158.9979

Circular Curve Data

Parameter	Value	Parameter	Value
Delta:	02° 59'59.95"	Type:	RIGHT
Radius:	2864.7900	DOC:	02° 00'00.00"
Length:	149.9993	Tangent:	75.0168
Mid-Ord:	0.9817	External:	0.9820
Chord:	149.9822	Course:	N 62° 17'33.09" E

Tangent Data

Description	Station	Northing	Easting
Start:	544+64.39	7079188.5555	2469158.9979
End:	546+96.51	7079291.0655	2469367.2571

Tangent Data

Parameter	Value	Parameter	Value
Length:	232.1210	Course:	N 63° 47'33.06" E

CURVE C-11

Curve Point Data

Description	Station	Northing	Easting
PC:	546+96.51	7079291.0655	2469367.2571
PI:	547+71.51	7079324.1948	2469434.5625
PT:	548+46.51	7079360.8012	2469500.0419

Circular Curve Data

Parameter	Value	Parameter	Value
Delta:	03° 00'00.00"	Type:	LEFT
Radius:	2864.7900	DOC:	02° 00'00.00"
Length:	150.0001	Tangent:	75.0172
Mid-Ord:	0.9817	External:	0.9820
Chord:	149.9829	Course:	N 62° 17'33.06" E

NORTHBOUND FRONTAGE ROAD (CON'T.)

Description:

Tangent Data

Description	Station	Northing	Easting
Start:	548+46.51	7079360.8012	2469500.0419
End:	557+50.00	7079801.6804	2470288.6604

Tangent Data

Parameter	Value	Parameter	Value
Length:	903.4896	Course:	N 60° 47'33.06" E

CURVE C-12

Curve Point Data

Description	Station	Northing	Easting
PC:	557+50.00	7079801.6804	2470288.6604
PI:	558+25.00	7079838.2868	2470354.1397
PT:	559+00.00	7079878.2699	2470417.6135

Circular Curve Data

Parameter	Value	Parameter	Value
Delta:	03° 00'00.00"	Type:	LEFT
Radius:	2864.7900	DOC:	02° 00'00.00"
Length:	150.0001	Tangent:	75.0172
Mid-Ord:	0.9817	External:	0.9820
Chord:	149.9829	Course:	N 59° 17'33.06" E

Tangent Data

Description	Station	Northing	Easting
Start:	559+00.00	7079878.2699	2470417.6135
End:	561+35.18	7080003.6202	2470616.6087

Tangent Data

Parameter	Value	Parameter	Value
Length:	235.1846	Course:	N 57° 47'33.06" E

CURVE C-13

Curve Point Data

Description	Station	Northing	Easting
PC:	561+35.18	7080003.6202	2470616.6087
PI:	562+10.49	7080043.7680	2470680.3439
PT:	562+85.80	7080080.5183	2470746.0965

Circular Curve Data

Parameter	Value	Parameter	Value
Delta:	03° 00'21.11"	Type:	RIGHT
Radius:	2870.9700	DOC:	01° 59'44.50"
Length:	150.6174	Tangent:	75.3260
Mid-Ord:	0.9877	External:	0.9880
Chord:	150.6002	Course:	N 59° 17'43.62" E

Tangent Data

Description	Station	Northing	Easting
Start:	562+85.80	7080080.5183	2470746.0965
End:	578+00.00	7080819.2720	2472067.8529

Tangent Data

Parameter	Value	Parameter	Value
Length:	1514.1984	Course:	N 60° 47'54.17" E

SOUTHBOUND ACCESS ROAD SCB-SBFR

Description:

CURVE C-14

Curve Point Data

Description	Station	Northing	Easting
PC:	536+82.09	7079068.3804	2468339.4002
PI:	538+30.31	7079147.4519	2468464.9272
PT:	539+78.53	7079212.9690	2468598.0318

Circular Curve Data

Parameter	Value	Parameter	Value
Delta:	06° 00'00.00"	Type:	RIGHT
Radius:	2830.7900	DOC:	02° 01'26.48"
Length:	296.4396	Tangent:	148.3554
Mid-Ord:	3.8795	External:	3.8848
Chord:	296.3042	Course:	N 60° 47'33.08" E

Tangent Data

Description	Station	Northing	Easting
Start:	539+78.53	7079212.9690	2468598.0318
End:	540+57.97	7079248.0506	2468669.3034

Tangent Data

Parameter	Value	Parameter	Value
Length:	79.4378	Course:	N 63° 47'33.08" E

CURVE C-1S

Curve Point Data

Description	Station	Northing	Easting
PC:	540+57.97	7079248.0506	2468669.3034
PI:	540+95.47	7079264.6153	2468702.9562
PT:	541+32.97	7079282.9184	2468735.6958

Circular Curve Data

Parameter	Value	Parameter	Value
Delta:	03° 00'00.00"	Type:	LEFT
Radius:	1432.3950	DOC:	03° 59'59.99"
Length:	75.0000	Tangent:	37.5086
Mid-Ord:	0.4908	External:	0.4910
Chord:	74.9915	Course:	N 62° 17'33.08" E

Tangent Data

Description	Station	Northing	Easting
Start:	541+32.97	7079282.9184	2468735.6958
End:	549+54.24	7079683.6800	2469452.5545

Tangent Data

Parameter	Value	Parameter	Value
Length:	821.2772	Course:	N 60° 47'33.08" E

STATE OF TEXAS
JOSEPH PERKINS
97522
LICENSED
PROFESSIONAL ENGINEER
3/15/13

Graham Associates, Inc.
CONSULTING ENGINEERS & PLANNERS
600 SIX FLAGS DRIVE, SUITE 500
ARLINGTON, TEXAS 76011 (817) 640-8535
TBPE FIRM: F-1191/TBPLS FIRM: 101538-00

© 2013 Texas Department of Transportation

S.H.-121
(SAM RAYBURN TOLLWAY)
AT SOUTH COLONY BLVD

BASELINE CONTROL
NBFR, SCB-SBFR

SHEET 2 OF 4 SHEETS

FED. RD. DIV. NO.	STATE PROJECT NO.		SHEET NO.
6	(SEE TITLE SHEET)		143
STATE	DIST.	COUNTY	
TEXAS	DAL	DENTON	
CONTROL NO.	SECTION NO.	JOB NO.	HIGHWAY NO.
0364	03	095	S.H.-121

REV. NO.	C.O. NO.	DESCRIPTION	DATE	BY

NORTHBOUND EXIT RAMP N8

Description:

CURVE C-16

Curve Point Data

Description	Station	Northing	Easting
PC:	80+00.00	7079047.3732	2468705.7810
PI:	81+00.00	7079096.1904	2468793.1024
PT:	82+00.00	7079138.7975	2468883.6163

Circular Curve Data

Parameter	Value	Parameter	Value
Delta:	04° 00' 00.00"	Type:	RIGHT
Radius:	2864.7900	DOC:	02° 00' 00.00"
Length:	200.0001	Tangent:	100.0407
Mid-Ord:	1.7452	External:	1.7462
Chord:	199.9595	Course:	N 62° 47' 33.08" E

Tangent Data

Description	Station	Northing	Easting
Start:	82+00.00	7079138.7975	2468883.6163
End:	92+61.45	7079590.8665	2469843.9865

Tangent Data

Parameter	Value	Parameter	Value
Length:	1061.4505	Course:	N 64° 47' 33.08" E

CURVE C-17

Curve Point Data

Description	Station	Northing	Easting
PC:	92+61.45	7079590.8665	2469843.9865
PI:	93+61.45	7079633.4736	2469934.5004
PT:	94+61.45	7079682.2908	2470021.8217

Circular Curve Data

Parameter	Value	Parameter	Value
Delta:	04° 00' 00.00"	Type:	LEFT
Radius:	2864.7900	DOC:	02° 00' 00.00"
Length:	200.0001	Tangent:	100.0407
Mid-Ord:	1.7452	External:	1.7462
Chord:	199.9595	Course:	N 62° 47' 33.08" E

SOUTHBOUND ENTRANCE RAMP S8

Description:

CURVE C-18

Curve Point Data

Description	Station	Northing	Easting
PC:	80+00.00	7079294.9776	2468878.1748
PI:	81+00.00	7079343.7948	2468965.4961
PT:	82+00.00	7079398.5844	2469049.1994

Circular Curve Data

Parameter	Value	Parameter	Value
Delta:	04° 00' 00.00"	Type:	LEFT
Radius:	2864.7900	DOC:	02° 00' 00.00"
Length:	200.0001	Tangent:	100.0407
Mid-Ord:	1.7452	External:	1.7462
Chord:	199.9595	Course:	N 58° 47' 33.08" E

Tangent Data

Description	Station	Northing	Easting
Start:	82+00.00	7079398.5844	2469049.1994
End:	84+91.40	7079558.1785	2469293.0153

Tangent Data

Parameter	Value	Parameter	Value
Length:	291.4043	Course:	N 56° 47' 33.08" E

CURVE C-19

Curve Point Data

Description	Station	Northing	Easting
PC:	84+91.40	7079558.1785	2469293.0153
PI:	85+91.40	7079612.9513	2469376.6931
PT:	86+91.40	7079670.6111	2469458.4084

Circular Curve Data

Parameter	Value	Parameter	Value
Delta:	02° 00' 00.00"	Type:	LEFT
Radius:	5729.5800	DOC:	01° 00' 00.00"
Length:	200.0001	Tangent:	100.0102
Mid-Ord:	0.8726	External:	0.8728
Chord:	199.9899	Course:	N 55° 47' 33.08" E

Tangent Data

Description	Station	Northing	Easting
Start:	86+91.40	7079670.6111	2469458.4084
End:	89+25.00	7079805.2865	2469649.2701

Tangent Data

Parameter	Value	Parameter	Value
Length:	233.5929	Course:	N 54° 47' 33.08" E

CURVE C-20

Curve Point Data

Description	Station	Northing	Easting
PC:	89+25.00	7079805.2865	2469649.2701
PI:	90+00.00	7079848.5664	2469710.6063
PT:	90+75.00	7079885.1979	2469776.1306

Circular Curve Data

Parameter	Value	Parameter	Value
Delta:	06° 00' 00.00"	Type:	RIGHT
Radius:	1432.3945	DOC:	04° 00' 00.00"
Length:	150.0000	Tangent:	75.0686
Mid-Ord:	1.9630	External:	1.9657
Chord:	149.9315	Course:	N 57° 47' 33.08" E

SOUTHBOUND ACCESS ROAD SBFR-SCB

Description:

Tangent Data

Description	Station	Northing	Easting
Start:	10+00.00	7079667.0957	2469461.8260
End:	17+88.73	7080051.9757	2470150.2766

Tangent Data

Parameter	Value	Parameter	Value
Length:	788.7312	Course:	N 60° 47' 33.08" E

CURVE C-21

Curve Point Data

Description	Station	Northing	Easting
PC:	17+88.73	7080051.9757	2470150.2766
PI:	18+63.73	7080088.5821	2470215.7560
PT:	19+38.73	7080128.5652	2470279.2298

Circular Curve Data

Parameter	Value	Parameter	Value
Delta:	03° 00' 00.00"	Type:	LEFT
Radius:	2864.7900	DOC:	02° 00' 00.00"
Length:	150.0001	Tangent:	75.0172
Mid-Ord:	0.9817	External:	0.9820
Chord:	149.9829	Course:	N 59° 17' 33.08" E

Tangent Data

Description	Station	Northing	Easting
Start:	19+38.73	7080128.5652	2470279.2298
End:	20+94.42	7080211.5446	2470410.9606

Tangent Data

Parameter	Value	Parameter	Value
Length:	155.6875	Course:	N 57° 47' 33.08" E

CURVE C-22

Curve Point Data

Description	Station	Northing	Easting
PC:	20+94.42	7080211.5446	2470410.9606
PI:	21+69.42	7080251.5278	2470474.4344
PT:	22+44.42	7080288.1342	2470539.9138

Circular Curve Data

Parameter	Value	Parameter	Value
Delta:	03° 00' 00.00"	Type:	RIGHT
Radius:	2864.7900	DOC:	02° 00' 00.00"
Length:	150.0001	Tangent:	75.0172
Mid-Ord:	0.9817	External:	0.9820
Chord:	149.9829	Course:	N 59° 17' 33.08" E

STATE OF TEXAS
JOSEPH PERKINS
97522
LICENSED PROFESSIONAL ENGINEER
3/1/13

Graham Associates, Inc.
CONSULTING ENGINEERS & PLANNERS
600 SIX FLAGS DRIVE, SUITE 500
ARLINGTON, TEXAS 76011 (817) 640-8535
TBPE FIRM: F-1191/TBPLS FIRM: 101538-00

© 2013 Texas Department of Transportation

S.H.-121 (SAM RAYBURN TOLLWAY) AT SOUTH COLONY BLVD

BASELINE CONTROL
RAMP N8, RAMP S8, SBFR-SCB

SHEET 3 OF 4 SHEETS

FED. RD. DIV. NO.	STATE PROJECT NO.		SHEET NO.
6	(SEE TITLE SHEET)		144
STATE	DIST.	COUNTY	
TEXAS	DAL	DENTON	
CONTROL NO.	SECTION NO.	JOB NO.	HIGHWAY NO.
0364	03	095	S.H.-121

REV. NO.	C.O. NO.	DESCRIPTION	DATE	BY

NORTHBOUND ACCESS ROAD SCB-NBFR

Description:

Tangent Data

Description	Station	Northing	Easting
Start:	10+00.00	7079473.3211	2469570.1562
End:	14+46.83	7079691.3605	2469960.1722

Tangent Data

Parameter	Value	Parameter	Value
Length:	446.8262	Course:	N 60° 47' 33.06" E

CURVE C-23

Curve Point Data

Description	Station	Northing	Easting
PC:	14+46.83	7079691.3605	2469960.1722
PI:	14+96.83	7079715.7617	2470003.8195
PT:	15+46.83	7079738.6247	2470048.2919

Circular Curve Data

Parameter	Value	Parameter	Value
Delta:	02° 00' 00.00"	Type:	RIGHT
Radius:	2864.7900	DOC:	02° 00' 00.00"
Length:	100.0000	Tangent:	50.0051
Mid-Ord:	0.4363	External:	0.4364
Chord:	99.9950	Course:	N 61° 47' 33.06" E

Tangent Data

Description	Station	Northing	Easting
Start:	15+46.83	7079738.6247	2470048.2919
End:	16+18.74	7079771.5040	2470112.2474

Tangent Data

Parameter	Value	Parameter	Value
Length:	71.9121	Course:	N 62° 47' 33.06" E

CURVE C-24

Curve Point Data

Description	Station	Northing	Easting
PC:	16+18.74	7079771.5040	2470112.2474
PI:	16+68.74	7079794.3669	2470156.7196
PT:	17+18.74	7079818.7680	2470200.3669

Circular Curve Data

Parameter	Value	Parameter	Value
Delta:	01° 59' 59.98"	Type:	LEFT
Radius:	2864.7900	DOC:	02° 00' 00.00"
Length:	99.9998	Tangent:	50.0050
Mid-Ord:	0.4363	External:	0.4364
Chord:	99.9947	Course:	N 61° 47' 33.07" E

Tangent Data

Description	Station	Northing	Easting
Start:	17+18.74	7079818.7680	2470200.3669
End:	23+22.81	7080113.5392	2470727.6362

Tangent Data

Parameter	Value	Parameter	Value
Length:	604.0719	Course:	N 60° 47' 33.08" E

SOUTH COLONY BOULEVARD

Description:

Tangent Data

Description	Station	Northing	Easting
Start:	24+86.64	7079597.0870	2470736.5590
End:	28+36.20	7079278.4111	2470592.9057

Tangent Data

Parameter	Value	Parameter	Value
Length:	349.5577	Course:	S 24° 15' 53.92" W

CURVE C-25

Curve Point Data

Description	Station	Northing	Easting
PC:	28+36.20	7079278.4111	2470592.9057
PI:	33+88.28	7078373.5251	2470184.9997
PT:	39+40.36	7079239.9029	2469700.6492

SOUTH COLONY BOULEVARD (CON'T)

Circular Curve Data

Parameter	Value	Parameter	Value
Delta:	126° 31' 39.15"	Type:	RIGHT
Radius:	500.0000	DOC:	11° 27' 32.96"
Length:	1104.1611	Tangent:	992.5754
Mid-Ord:	275.0581	External:	611.3982
Chord:	893.0871	Course:	S 87° 31' 43.50" W

Tangent Data

Description	Station	Northing	Easting
Start:	39+40.36	7079239.9029	2469700.6492
End:	53+00.00	7080426.6720	2469037.1830

Tangent Data

Parameter	Value	Parameter	Value
Length:	1359.6353	Course:	N 29° 12' 26.92" W

NORTHBOUND ACCESS ROAD NBFR SCB PH 1

CURVE C-26

Curve Point Data

Description	Station	Northing	Easting
PC:	0+00.00	7078984.7610	2468786.3820
PI:	0+62.15	7079014.9930	2468840.7290
PT:	1+24.30	7079040.3740	2468897.5050

Circular Curve Data

Parameter	Value	Parameter	Value
Delta:	05° 00' 00.00"	Type:	RIGHT
Radius:	1424.3945	DOC:	04° 01' 20.88"
Length:	124.3019	Tangent:	62.1904
Mid-Ord:	1.3557	External:	1.3570
Chord:	124.2624	Course:	N 63° 24' 50.31" E

Tangent Data

Description	Station	Northing	Easting
Start:	1+24.30	7079040.3740	2468897.5050
End:	3+24.30	7079121.9950	2469080.0920

Tangent Data

Parameter	Value	Parameter	Value
Length:	200.0000	Course:	N 65° 54' 50.31" E

CURVE C-27

Curve Point Data

Description	Station	Northing	Easting
PC:	3+24.30	7079121.9950	2469080.0920
PI:	3+72.18	7079141.5370	2469123.8070
PT:	4+20.06	7079159.6030	2469168.1520

Circular Curve Data

Parameter	Value	Parameter	Value
Delta:	01° 55' 14.00"	Type:	RIGHT
Radius:	2856.7900	DOC:	02° 00' 20.16"
Length:	95.7596	Tangent:	47.8843
Mid-Ord:	0.4012	External:	0.4013
Chord:	95.7552	Course:	N 66° 52' 27.31" E

Tangent Data

Description	Station	Northing	Easting
Start:	4+20.06	7079159.6030	2469168.1520
End:	6+49.14	7079246.0290	2469380.2990

Tangent Data

Parameter	Value	Parameter	Value
Length:	229.0760	Course:	N 67° 50' 04.31" E

CURVE C-28

Curve Point Data

Description	Station	Northing	Easting
PC:	6+49.14	7079246.0290	2469380.2990
PI:	8+09.41	7079318.6530	2469558.5640
PT:	9+69.69	7079155.9700	2469661.4580

Circular Curve Data

Parameter	Value	Parameter	Value
Delta:	79° 51' 10.48"	Type:	RIGHT
Radius:	230.0000	DOC:	24° 54' 40.35"
Length:	320.5501	Tangent:	192.4904
Mid-Ord:	53.6202	External:	69.9209
Chord:	295.2298	Course:	N 72° 14' 20.45" E

Length:	1359.6353	Course:	N 29° 12' 26.92" W

SAM RAYBURN TOLLWAY

Description:

Tangent Data

Description	Station	Northing	Easting
Start:	371+73.57	7070849.6980	2454023.8200
End:	490+68.04	7076653.8830	2464406.0030

Tangent Data

Parameter	Value	Parameter	Value
Length:	11894.4642	Course:	N 60°47'33.07" E

Curve Point Data

Description	Station	Northing	Easting
PC:	490+68.04	7076653.8830	2464406.0030
PI:	493+51.32	7076792.1450	2464653.3180
PT:	496+34.60	7076942.4610	2464893.4980

Circular Curve Data

Parameter	Value	Parameter	Value
Delta:	02° 49' 58.15"	Type:	RIGHT
Radius:	11459.1559	DOC:	00° 30' 00.00"
Length:	566.5639	Tangent:	283.3397
Mid-Ord:	3.5013	External:	3.5024
Chord:	566.5062	Course:	N S9° 22' 33.99" E

Tangent Data

Description	Station	Northing	Easting
Start:	496+34.60	7076942.4610	2464893.4980
End:	500+99.85	7077189.2850	2465287.8820

Curve Point Data

Description	Station	Northing	Easting
PC:	500+99.85	7077189.2850	2465287.8820
PI:	503+83.14	7077339.6020	2465528.0620
PT:	506+66.42	7077477.8640	2465775.3780

Circular Curve Data

Parameter	Value	Parameter	Value
Delta:	02° 49' 58.16"	Type:	RIGHT
Radius:	11459.1600	DOC:	00° 30' 00.00"
Length:	566.5644	Tangent:	283.3400
Mid-Ord:	3.5013	External:	3.5024
Chord:	566.5068	Course:	N 59° 22' 34.00" E

Tangent Data

Description	Station	Northing	Easting
Start:	506+66.42	7077477.8639	2465775.3779
End:	589+83.49	7081536.3744	2473035.0021

Tangent Data

Parameter	Value	Parameter	Value
Length:	8317.0699	Course:	N 60° 47' 33.08" E

Curve Point Data

Description	Station	Northing	Easting
PC:	589+83.49	7081536.3740	2473035.0020
PI:	603+04.12	7082182.4660	2474190.6920
PT:	616+24.75	7082616.9340	2475441.4070

Circular Curve Data

Parameter	Value	Parameter	Value
Delta:	10° 03' 05.29"	Type:	RIGHT
Radius:	15055.8300	DOC:	00° 22' 50.00"
Length:	2641.2626	Tangent:	1324.0288
Mid-Ord:	57.8829	External:	58.1063
Chord:	2637.8770	Course:	N 65° 49' 05.72" E

Tangent Data

Description	Station	Northing	Easting
Start:	616+24.75	7082616.9340	2475441.4070
End:	675+00.00	7084544.8480	2480991.3360

Tangent Data

STATE OF TEXAS
JOSEPH PERKINS
97522
LICENSED PROFESSIONAL ENGINEER
3/15/12

Graham Associates, Inc.
CONSULTING ENGINEERS & PLANNERS
600 SIX FLAGS DRIVE, SUITE 500
ARLINGTON, TEXAS 76011 (817) 640-8535
TBPE FIRM: F-1191/TBPLS FIRM: 101538-00

© 2013 Texas Department of Transportation

S.H.-121 (SAM RAYBURN TOLLWAY) AT SOUTH COLONY

BASELINE CONTROL
NBFR-SCB, SCB, S.H. 121

SHEET 4 OF 4 SHEETS

FED. RD. DIV. NO.	STATE PROJECT NO.		SHEET NO.
6	(SEE TITLE SHEET)		145
STATE	DIST.	COUNTY	
TEXAS	DAL	DENTON	
CONTROL NO.	SECTION NO.	JOB NO.	HIGHWAY NO.
0364	03	095	S.H.-121

REV. NO.	C.O. NO.	DESCRIPTION	DATE	BY

LEGEND

C-1 CURVE NUMBER

MONUMENT LOCATION

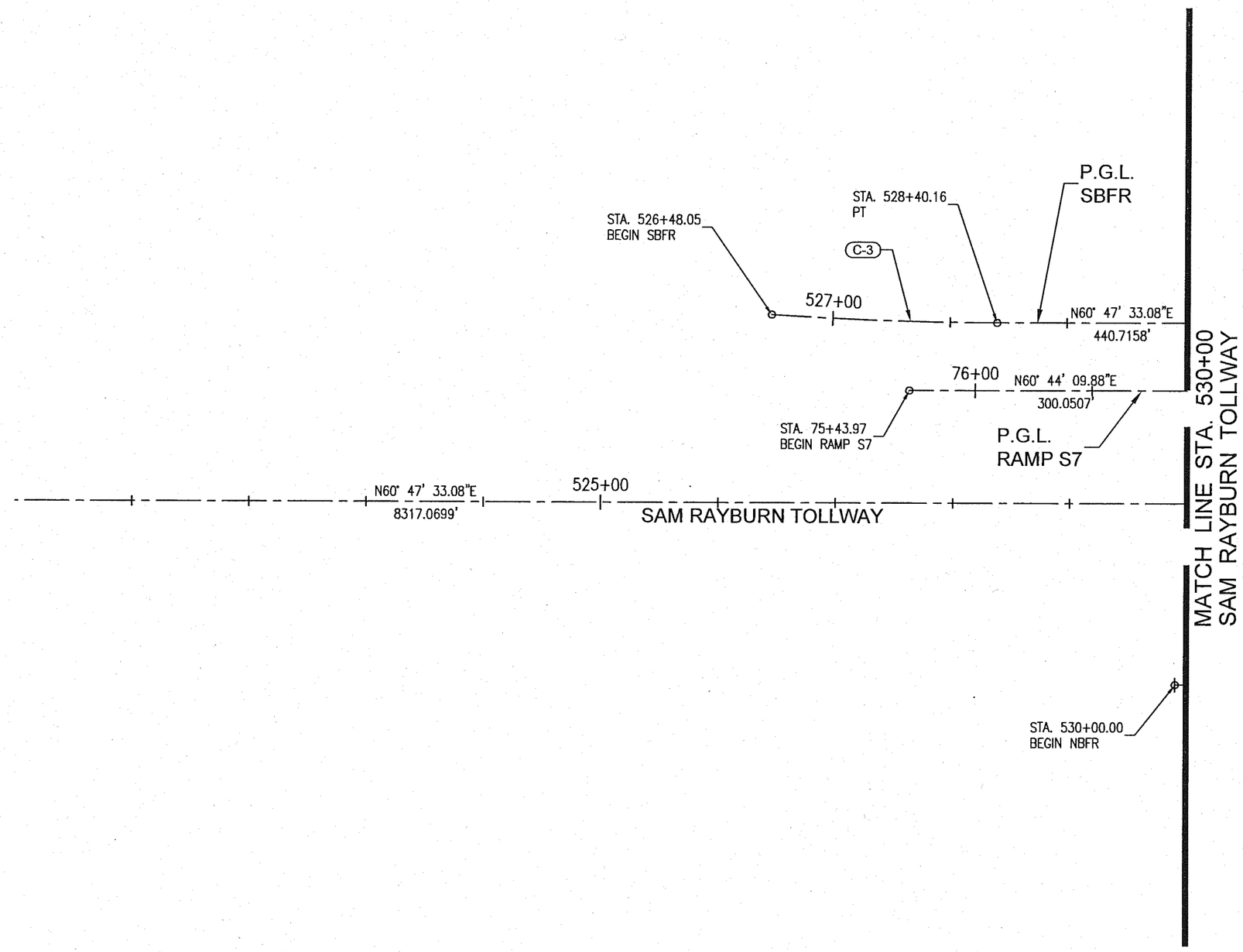

GRAPHIC SCALE 1"=100'

0 100 200

STATE OF TEXAS
JOSEPH PERKINS
97522
LICENSED
PROFESSIONAL ENGINEER
3/15/13

Graham Associates, Inc.
CONSULTING ENGINEERS & PLANNERS
600 SIX FLAGS DRIVE, SUITE 500
ARLINGTON, TEXAS 76011 (817) 640-8535
TBPE FIRM: F-1191/TBPLS FIRM: 101538-00

© 2013 Texas Department of Transportation

S.H.-121
(SAM RAYBURN TOLLWAY)
AT SOUTH COLONY BLVD

HORIZONTAL CONTROL LAYOUT
STA. 520+00 TO STA. 530+00

SHEET 1 OF 8 SHEETS

FED. RD. DIV. NO.	STATE PROJECT NO.		SHEET NO.
6	(SEE TITLE SHEET)		146
STATE	DIST.	COUNTY	
TEXAS	DAL	DENTON	
CONTROL NO.	SECTION NO.	JOB NO.	HIGHWAY NO.
0364	03	095	S.H.-121

PLOTTED BY: JOE PERKINS
PLOTTED ON: 3/10/2013 10:59 AM
FILE NAME: J:\COLONY\SH-121\CAD\SHEETS\HORIZONTAL CONTROL LAYOUT\HORIZONTAL CONTROL.DWG

REV. NO.	C.O. NO.	DESCRIPTION	DATE	BY

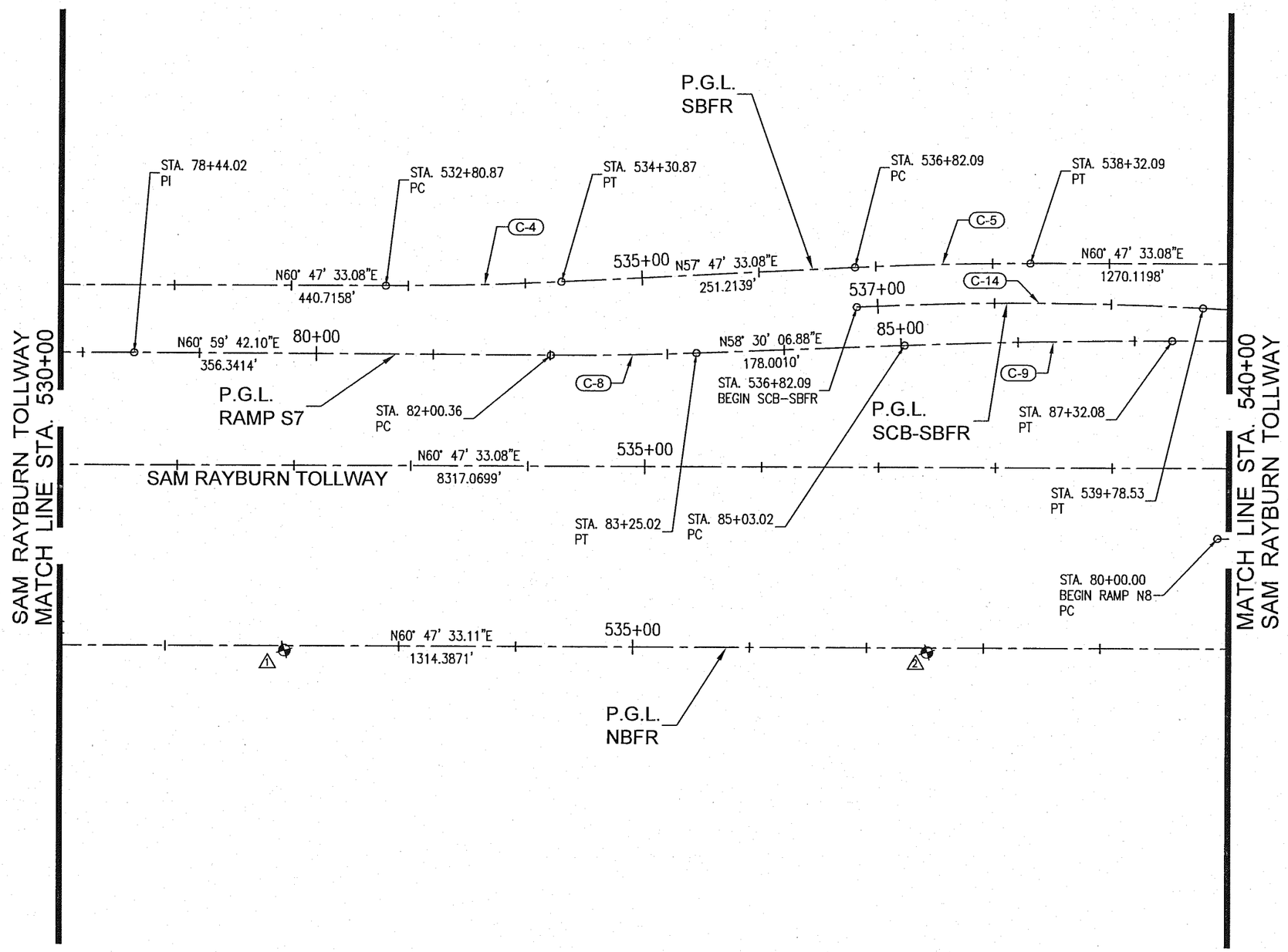

LEGEND

C-1 CURVE NUMBER

MONUMENT LOCATION

GRAPHIC SCALE 1"=100'

0 100 200

CONTROL POINT						
POINT	NORTHING	EASTING	ELEVATION	STATION	OFFSET	DESCRIPTION
1	7,078,572.752	2,468,057.169	604.03	531+92.38	157.77' RT.	X CUT ON INLET
2	7,078,841.095	2,468,536.825	605.52	537+41.95	157.68' RT.	X CUT ON INLET

STATE OF TEXAS
JOSEPH PERKINS
97522
LICENSED
PROFESSIONAL ENGINEER
3/15/13

Graham Associates, Inc.
CONSULTING ENGINEERS & PLANNERS
600 SIX FLAGS DRIVE, SUITE 500
ARLINGTON, TEXAS 76011 (817) 640-8535
TBPE FIRM: F-1191/TBPLS FIRM: 101538-00

© 2013 Texas Department of Transportation

S.H.-121
(SAM RAYBURN TOLLWAY)
AT SOUTH COLONY BLVD

HORIZONTAL CONTROL LAYOUT
STA. 530+00 TO STA. 540+00

SHEET 2 OF 8 SHEETS

FED. RD. DIV. NO.	STATE PROJECT NO.		SHEET NO.
6	(SEE TITLE SHEET)		147
STATE	DIST.	COUNTY	
TEXAS	DAL	DENTON	
CONTROL NO.	SECTION NO.	JOB NO.	HIGHWAY NO.
0364	03	095	S.H.-121

PLOTTED BY: JOE PERKINS
PLOTTED ON: 3/10/2013 11:01 AM
FILE NAME: J:\COLONY\SH-121\CAD\SHEETS\HORIZONTAL CONTROL LAYOUT\HORIZONTAL CONTROL.DWG

REV. NO.	C.O. NO.	DESCRIPTION	DATE	BY

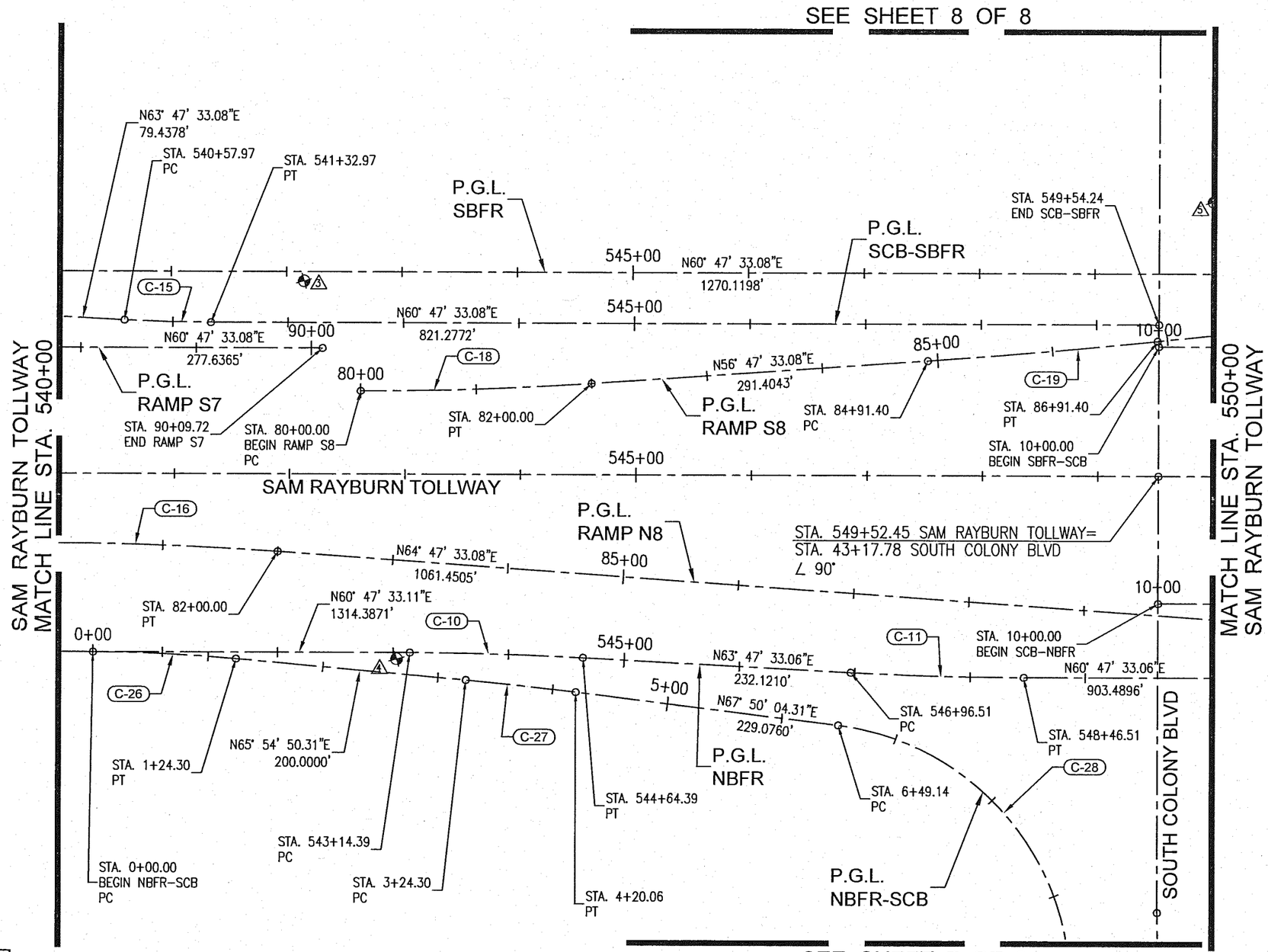

CONTROL POINT						
POINT	NORTHING	EASTING	ELEVATION	STATION	OFFSET	DESCRIPTION
3	7,079,353.174	2,468,788.530	606.40	542+11.87	167.07' LT.	1/2IN CIRS
4	7,079,108.322	2,469,018.906	607.46	542+93.28	159.42' RT.	X CUT ON INLET
5	7,079,799.310	2,469,441.866	607.82	549+99.55	237.14' LT.	X CUT ON INLET

LEGEND

C-1 CURVE NUMBER

MONUMENT LOCATION

GRAPHIC SCALE 1"=100'

0 100 200

STATE OF TEXAS
JOSEPH PERKINS
97522
LICENSED
PROFESSIONAL ENGINEER
3/15/13

Graham Associates, Inc.
CONSULTING ENGINEERS & PLANNERS
600 SIX FLAGS DRIVE, SUITE 500
ARLINGTON, TEXAS 76011 (817) 640-8535
TBPE FIRM: F-1191/TBPLS FIRM: 101538-00

© 2013 Texas Department of Transportation

S.H.-121 (SAM RAYBURN TOLLWAY) AT SOUTH COLONY BLVD

HORIZONTAL CONTROL LAYOUT
STA. 540+00 TO STA. 550+00

SHEET 3 OF 8 SHEETS

FED. RD. DIV. NO.	STATE PROJECT NO.		SHEET NO.
6	(SEE TITLE SHEET)		148
STATE	DIST.	COUNTY	
TEXAS	DAL	DENTON	
CONTROL NO.	SECTION NO.	JOB NO.	HIGHWAY NO.
0364	03	095	S.H.-121

PLOTTED BY: JOE PERKINS
PLOTTED ON: 3/10/2013 11:14 AM
FILE NAME: J:\COLONY\SH-121\CAD\SHEETS\HORIZONTAL CONTROL LAYOUT\HORIZONTAL CONTROL.DWG

REV. NO.	C.O. NO.	DESCRIPTION	DATE	BY

LEGEND

(C-1) CURVE NUMBER

MONUMENT LOCATION

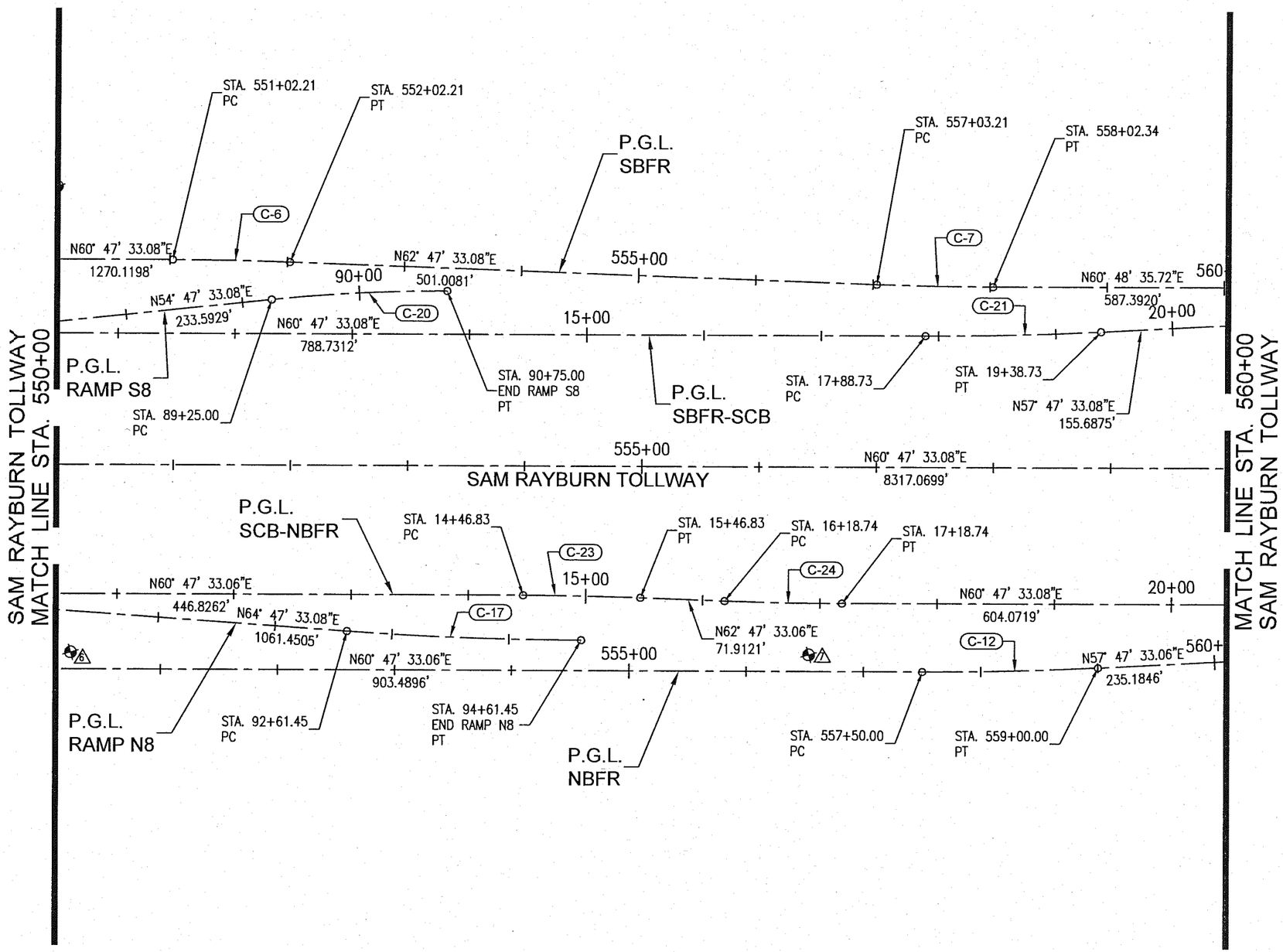

GRAPHIC SCALE 1"=100'

0 100 200

CONTROL POINT						
POINT	NORTHING	EASTING	ELEVATION	STATION	OFFSET	DESCRIPTION
6	1,079,459.489	2,469,647.027	610.36	550+12.80	159.58' RT.	X CUT ON INLET
7	1,079,786.689	2,470,197.113	612.66	556+42.85	159.87' RT.	X CUT ON INLET

STATE OF TEXAS
JOSEPH PERKINS
97522
LICENSED
PROFESSIONAL ENGINEER
3/12/13

Graham Associates, Inc.
CONSULTING ENGINEERS & PLANNERS
600 SIX FLAGS DRIVE, SUITE 500
ARLINGTON, TEXAS 76011 (817) 640-8535
TBPE FIRM: F-1191/TBPLS FIRM: 101538-00

© 2013 Texas Department of Transportation

S.H.-121 (SAM RAYBURN TOLLWAY) AT SOUTH COLONY BLVD

HORIZONTAL CONTROL LAYOUT STA. 550+00 TO STA. 560+00

SHEET 4 OF 8 SHEETS

FED. RD. DIV. NO.	STATE PROJECT NO.		SHEET NO.
6	(SEE TITLE SHEET)		149
STATE	DIST.	COUNTY	
TEXAS	DAL	DENTON	
CONTROL NO.	SECTION NO.	JOB NO.	HIGHWAY NO.
0364	03	095	S.H.-121

PLOTTED BY: JOE PERKINS
PLOTTED ON: 3/10/2013 11:08 AM
FILE NAME: J:\COLONY\SH-121\CAD\SHEETS\HORIZONTAL CONTROL LAYOUT\HORIZONTAL CONTROL.DWG

REV. NO.	C.O. NO.	DESCRIPTION	DATE	BY

LEGEND

C-1 CURVE NUMBER

MONUMENT LOCATION

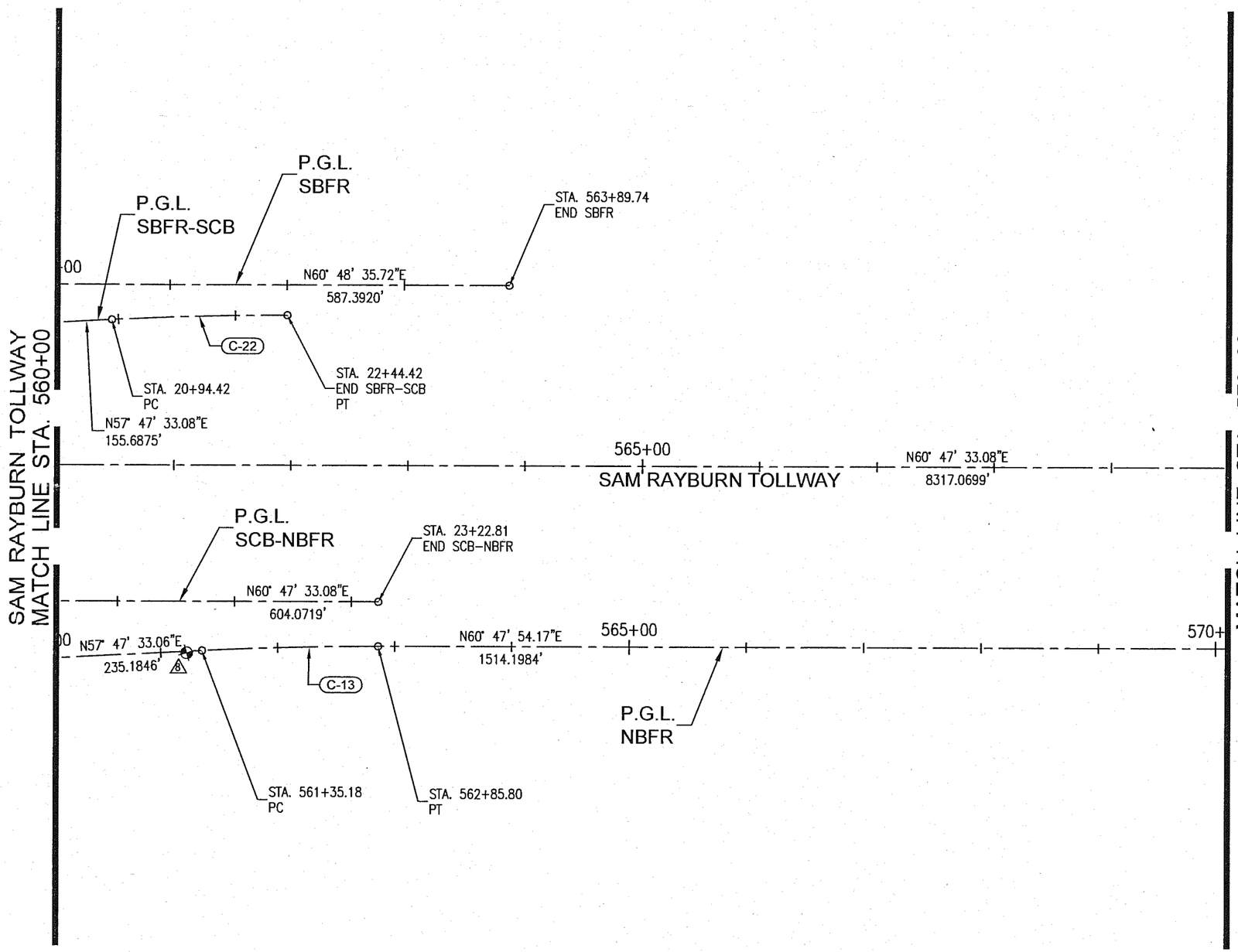

GRAPHIC SCALE 1"=100'

0 100 200

CONTROL POINT						
POINT	NORTHING	EASTING	ELEVATION	STATION	OFFSET	DESCRIPTION
8	7,079,995.552	2,470,606.201	614.23	561+11.61	159.73' RT.	X CUT ON INLET

STATE OF TEXAS
JOSEPH PERKINS
97522
LICENSED
PROFESSIONAL ENGINEER
3/15/13

Graham Associates, Inc.
CONSULTING ENGINEERS & PLANNERS
600 SIX FLAGS DRIVE, SUITE 500
ARLINGTON, TEXAS 76011 (817) 640-8535
TBPE FIRM: F-1191/TBPLS FIRM: 101538-00

© 2013 Texas Department of Transportation

S.H.-121
(SAM RAYBURN TOLLWAY)
AT SOUTH COLONY BLVD

HORIZONTAL CONTROL LAYOUT
STA. 560+00 TO STA. 570+00

SHEET 5 OF 8 SHEETS

FED. RD. DIV. NO.	STATE PROJECT NO.		SHEET NO.
6	(SEE TITLE SHEET)		150
STATE	DIST.	COUNTY	
TEXAS	DAL	DENTON	
CONTROL NO.	SECTION NO.	JOB NO.	HIGHWAY NO.
0364	03	095	S.H.-121

PLOTTED BY: JOE PERKINS
PLOTTED ON: 3/10/2013 11:09 AM
FILE NAME: J:\COLONY\SH-121\CAD\SHEETS\HORIZONTAL CONTROL LAYOUT\HORIZONTAL CONTROL.DWG

REV. NO.	C.O. NO.	DESCRIPTION	DATE	BY

LEGEND

C-1 CURVE NUMBER

MONUMENT LOCATION

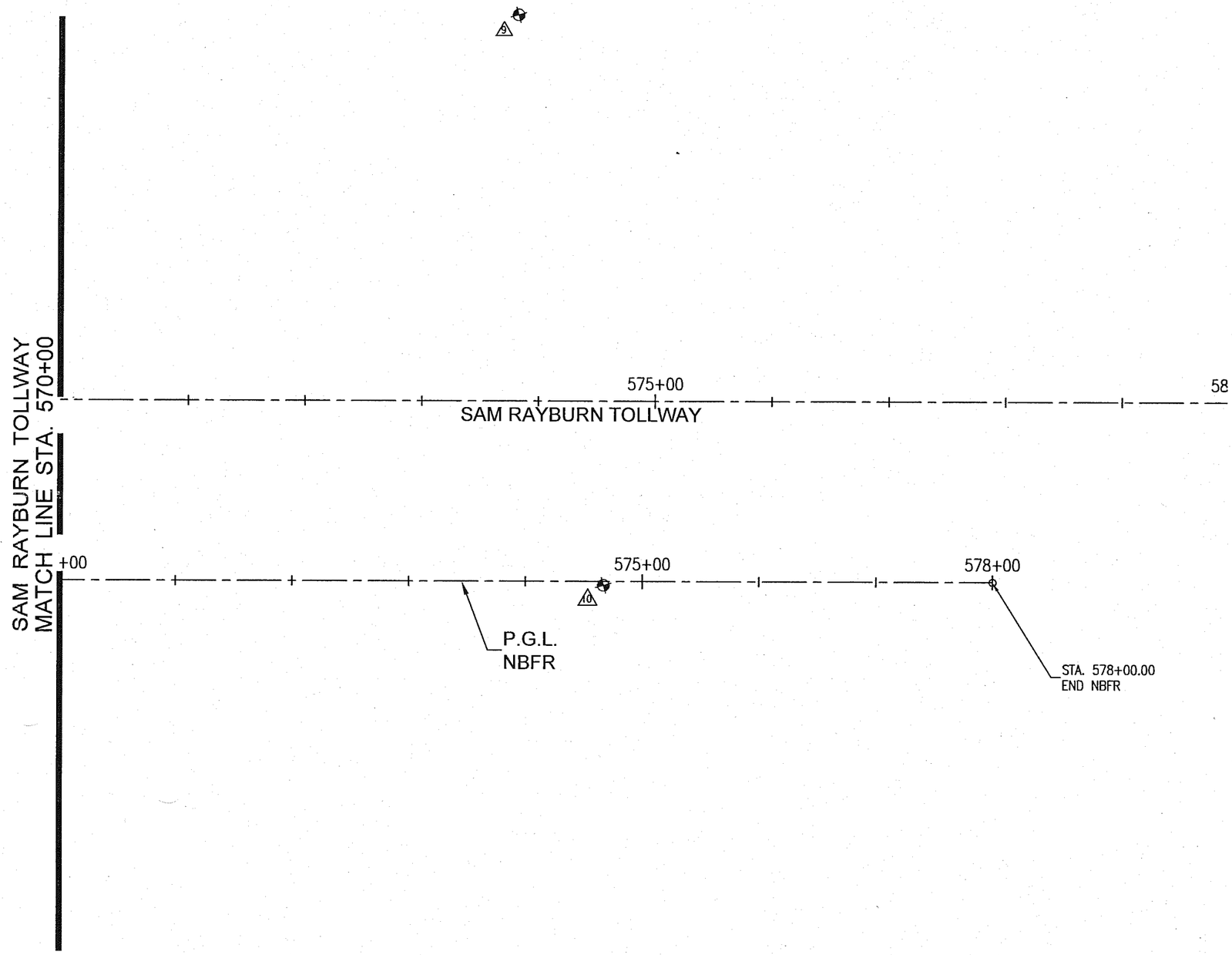

GRAPHIC SCALE 1"=100'

0 100 200

CONTROL POINT						
POINT	NORTHING	EASTING	ELEVATION	STATION	OFFSET	DESCRIPTION
9	7,081,042.570	2,471,475.743	619.01	573+81.51	329.86' LT.	X CUT ON INLET
10	7,080,653.913	2,471,778.633	619.60	574+56.24	157.19' RT.	X CUT

STATE OF TEXAS
JOSEPH PERKINS
97522
LICENSED
PROFESSIONAL ENGINEER
3/15/13

Graham Associates, Inc.
CONSULTING ENGINEERS & PLANNERS
600 SIX FLAGS DRIVE, SUITE 500
ARLINGTON, TEXAS 76011 (817) 640-8535
TBPE FIRM: F-1191/TBPLS FIRM: 101538-00

© 2013 Texas Department of Transportation

S.H.-121
(SAM RAYBURN TOLLWAY)
AT SOUTH COLONY BLVD

HORIZONTAL CONTROL LAYOUT
STA. 570+00 TO END

SHEET 6 OF 8 SHEETS

FED. RD. DIV. NO.	STATE PROJECT NO.		SHEET NO.
6	(SEE TITLE SHEET)		151
STATE	DIST.	COUNTY	
TEXAS	DAL	DENTON	
CONTROL NO.	SECTION NO.	JOB NO.	HIGHWAY NO.
0364	03	095	S.H.-121

PLOTTED BY: JOE PERKINS
PLOTTED ON: 3/10/2013 11:10 AM
FILE NAME: J:\COLONY\SH-121\CAD\SHEETS\HORIZONTAL CONTROL LAYOUT\HORIZONTAL CONTROL.DWG

REV. NO.	C.O. NO.	DESCRIPTION	DATE	BY

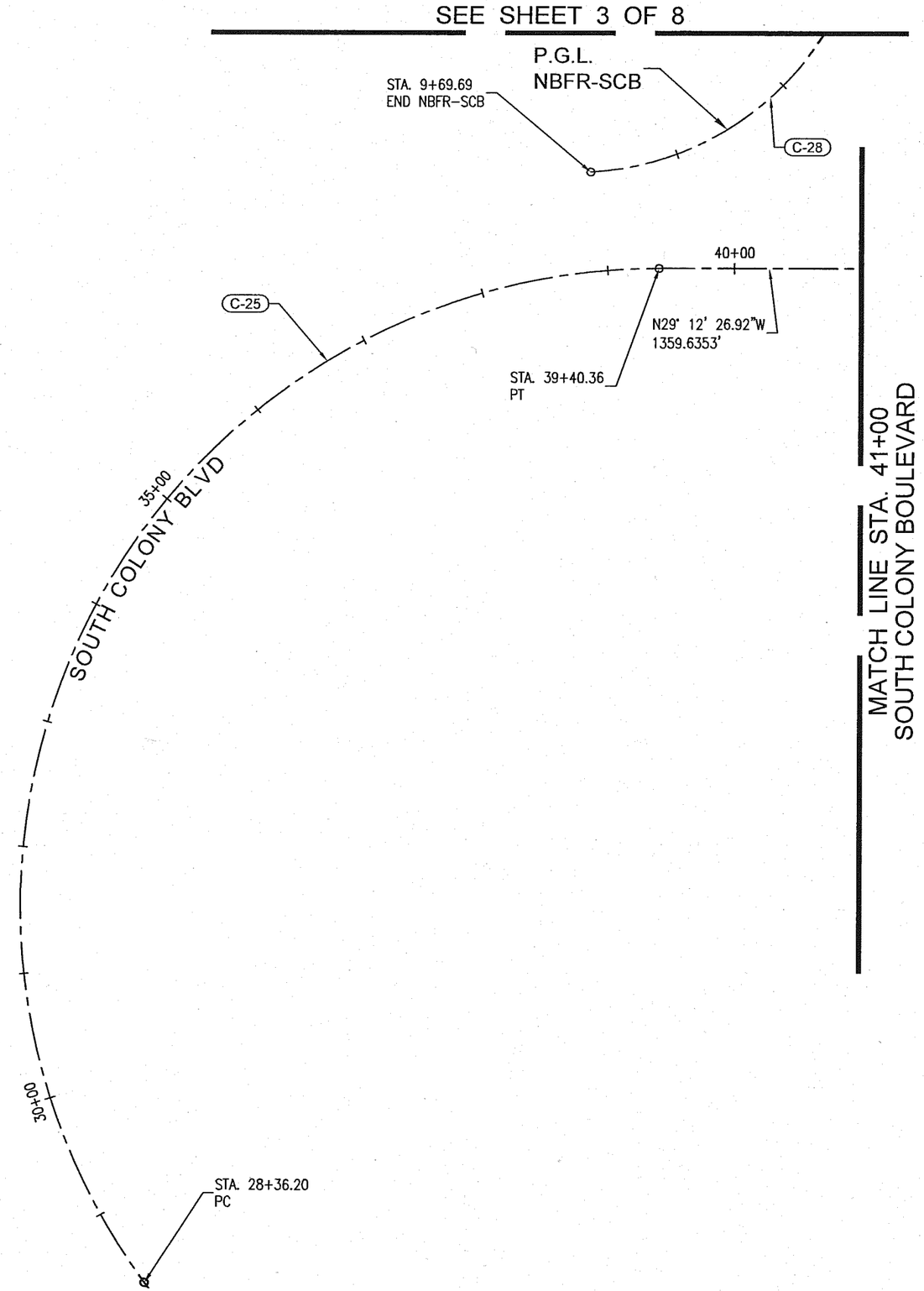

LEGEND

(C-1) CURVE NUMBER

MONUMENT LOCATION

GRAPHIC SCALE 1"=100'

0 100 200

STATE OF TEXAS
JOSEPH PERKINS
97522
LICENSED
PROFESSIONAL ENGINEER
3/15/13

Graham Associates, Inc.
CONSULTING ENGINEERS & PLANNERS
600 SIX FLAGS DRIVE, SUITE 500
ARLINGTON, TEXAS 76011 (817) 640-8535
TBPE FIRM: F-1191/TBPLS FIRM: 101538-00

© 2013 Texas Department of Transportation

SOUTH COLONY BLVD

HORIZONTAL CONTROL LAYOUT
STA. 28+00 TO 41+00

SHEET 7 OF 8 SHEETS

FED. RD. DIV. NO.	STATE PROJECT NO.		SHEET NO.
6	(SEE TITLE SHEET)		152
STATE	DIST.	COUNTY	
TEXAS	DAL	DENTON	
CONTROL NO.	SECTION NO.	JOB NO.	HIGHWAY NO.
0364	03	095	S.H.-121

REV. NO.	C.O. NO.	DESCRIPTION	DATE	BY

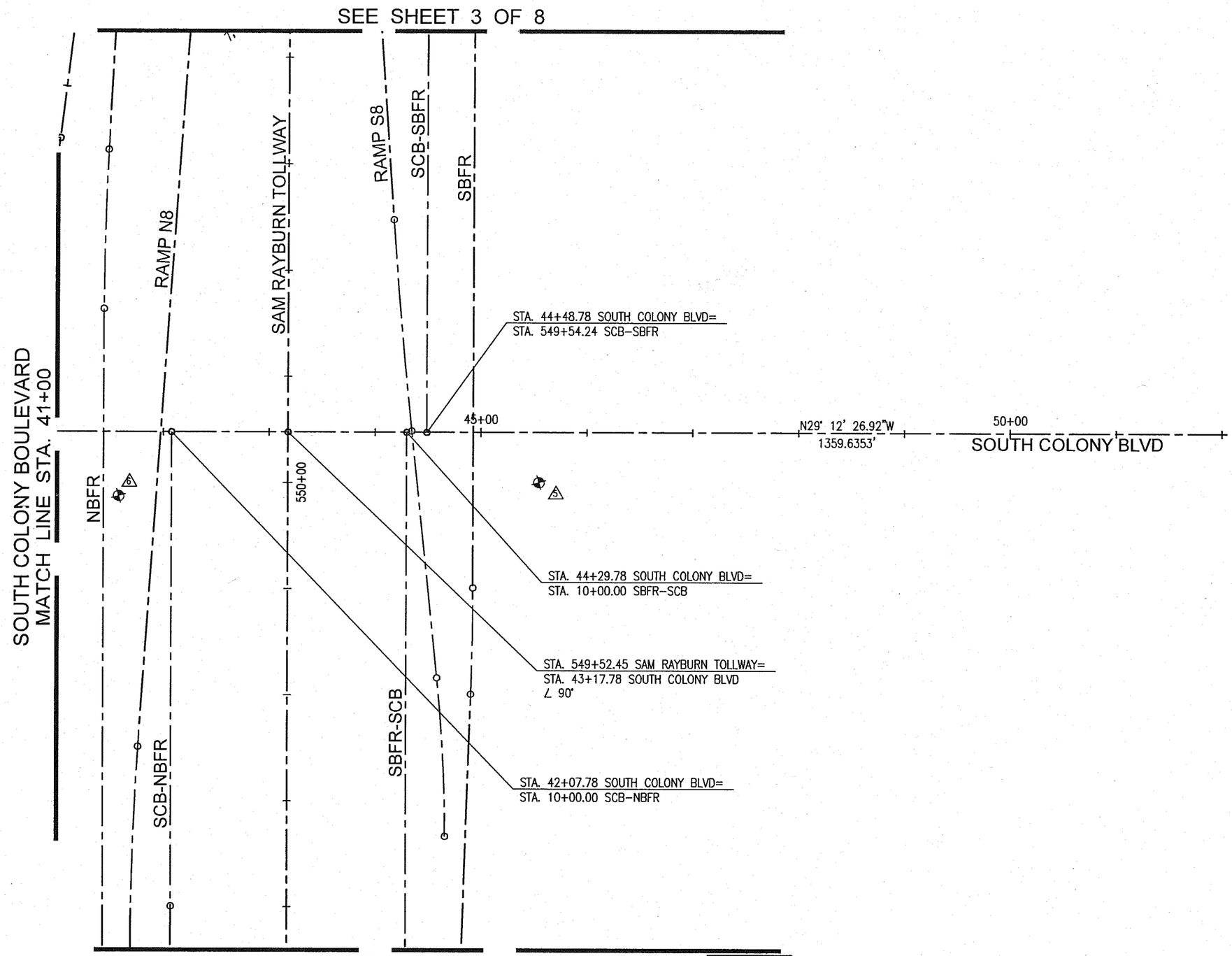

LEGEND

(C-1) CURVE NUMBER

MONUMENT LOCATION

GRAPHIC SCALE 1"=100'

0 100 200

CONTROL POINT						
POINT	NORTHING	EASTING	ELEVATION	STATION	OFFSET	DESCRIPTION
5	7,079,799.310	2,469,441.866	607.82	45+54.92	47.09' RT.	X CUT ON INLET
6	7,079,459.489	2,469,647.027	610.36	41+58.20	60.35' RT.	X CUT ON INLET

STATE OF TEXAS
JOSEPH PERKINS
97522
LICENSED
PROFESSIONAL ENGINEER
3/15/13

Graham Associates, Inc.
CONSULTING ENGINEERS & PLANNERS
600 SIX FLAGS DRIVE, SUITE 500
ARLINGTON, TEXAS 76011 (817) 640-8535
TBPE FIRM: F-1191/TBPLS FIRM: 101538-00

© 2013 Texas Department of Transportation

SOUTH COLONY BLVD

HORIZONTAL CONTROL LAYOUT
STA. 41+00 TO STA. 52+00

SHEET 8 OF 8 SHEETS

FED. RD. DIV. NO.	STATE PROJECT NO.		SHEET NO.
6	(SEE TITLE SHEET)		153
STATE	DIST.	COUNTY	
TEXAS	DAL	DENTON	
CONTROL NO.	SECTION NO.	JOB NO.	HIGHWAY NO.
0364	03	095	S.H.-121

REV. NO.	C.O. NO.	DESCRIPTION	DATE	BY

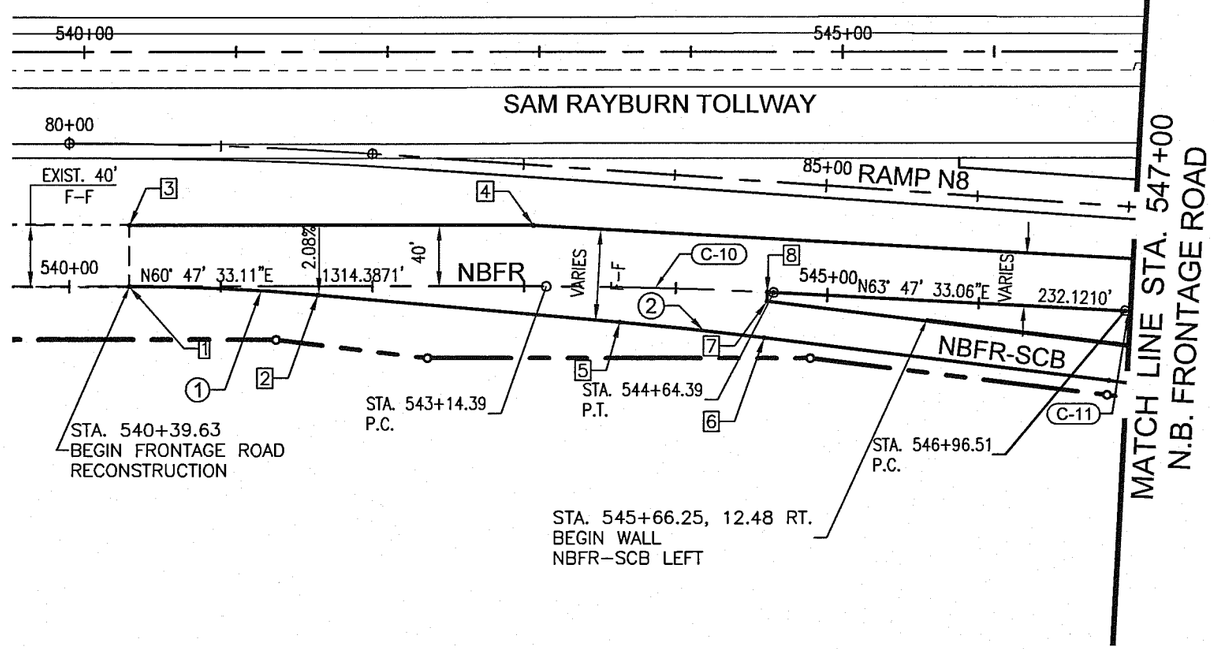

CURVE DATA

Curve #	Δ	D	R	T	L
C-10	2°59'59.95"	2°00'00.00"	2864.7900'	75.0168'	149.9993'
C-11	3°00'00.00"	2°00'00.00"	2864.7900'	75.0172'	150.0001'
1	5°00'00.00"	4°01'20.88"	1424.3945'	62.1904'	124.3019'
2	1°55'14.00"	2°00'20.16"	2856.7900'	47.8843'	95.7596'

TABLE OF PAVING ELEVATIONS

POINT #	STATION	OFFSET	ELEV.
1	540+39.63	0.02' LT.	606.00
2	541+63.76	5.67' RT.	606.47
3	540+39.70	40.13' LT.	606.46
4	543+06.05	40.00' LT.	608.13
5	543+63.36	23.10' RT.	607.39
6	544+59.77	30.02' RT.	608.81
7	544+60.35	6.00' RT.	609.32
8	544+60.36	0.00'	609.45

NOTE: ALL DIMENSIONS ARE TO FACE OF CURB UNLESS OTHERWISE NOTED.

GRAPHIC SCALE 1"=100'

0 100 200

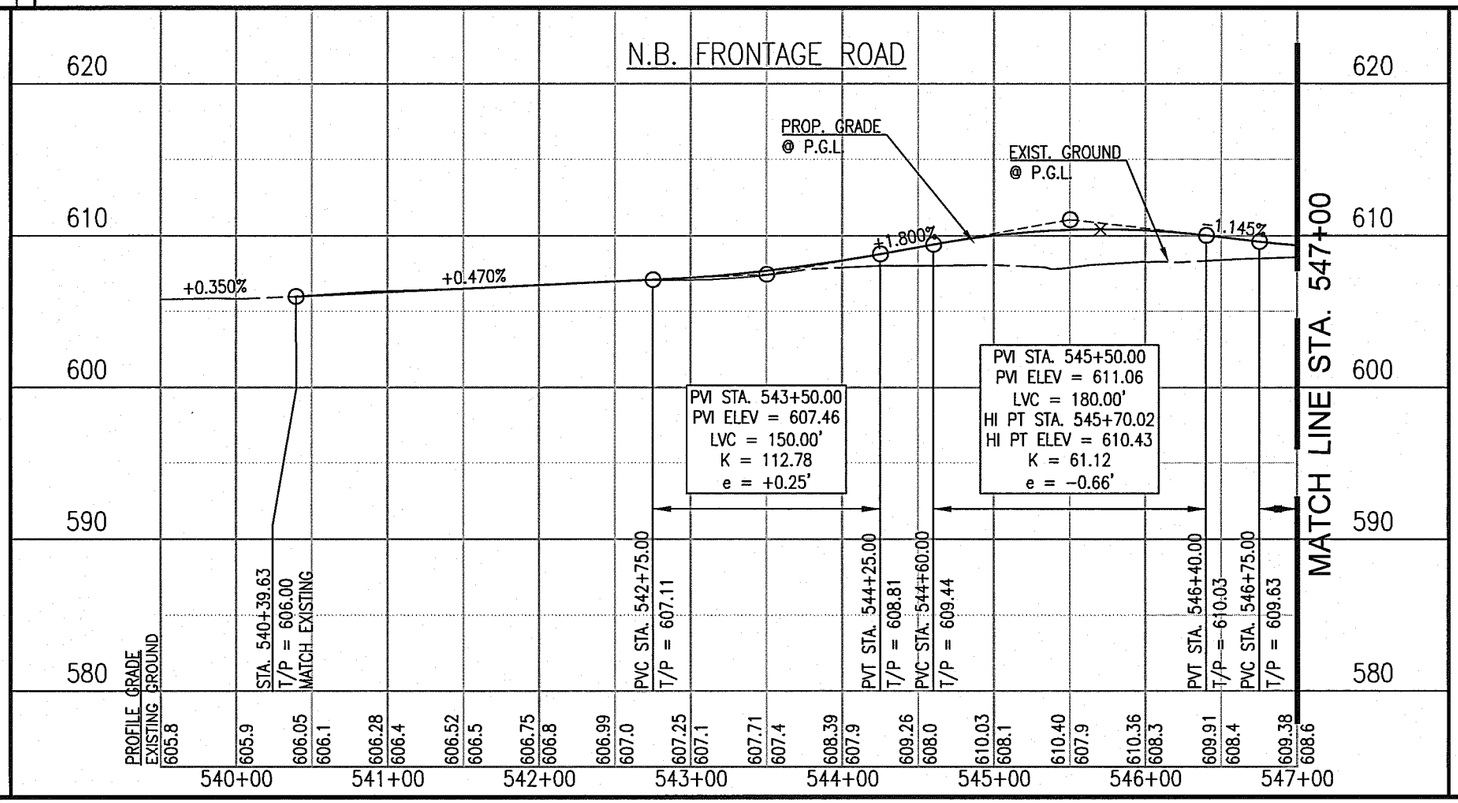

PROFILE SCALE:
1" = 100' HORZ.
1" = 10' VERT.

STATE OF TEXAS
JOSEPH PERKINS
97522
LICENSED PROFESSIONAL ENGINEER
4/30/13

Graham Associates, Inc.
CONSULTING ENGINEERS & PLANNERS
600 SIX FLAGS DRIVE, SUITE 500
ARLINGTON, TEXAS 76011 (817) 640-8535
TBPE FIRM: F-1191/TBPLS FIRM: 101538-00

© 2013 Texas Department of Transportation

PLAN/PROFILE

S.H.-121
(SAM RAYBURN TOLLWAY)
AT SOUTH COLONY BLVD

N.B. FRONTAGE ROAD
STA. 540+39.63 TO STA. 547+00

SHEET 1 OF 3 SHEETS

FED. RD. DIV. NO.	STATE PROJECT NO.		SHEET NO.
6	(SEE TITLE SHEET)		154
STATE	DIST.	COUNTY	
TEXAS	DAL	DENTON	
CONTROL NO.	SECTION NO.	JOB NO.	HIGHWAY NO.
0364	03	095	S.H.-121

PLOTTED BY: CLAUDIA FERNANDEZ
PLOTTED ON: 4/22/2013 3:58 PM
FILE NAME: J:\COLONY\SH-121\CAD\SHEETS\PAVING SHEETS\NBFR-541+37.21TO547+00.DWG

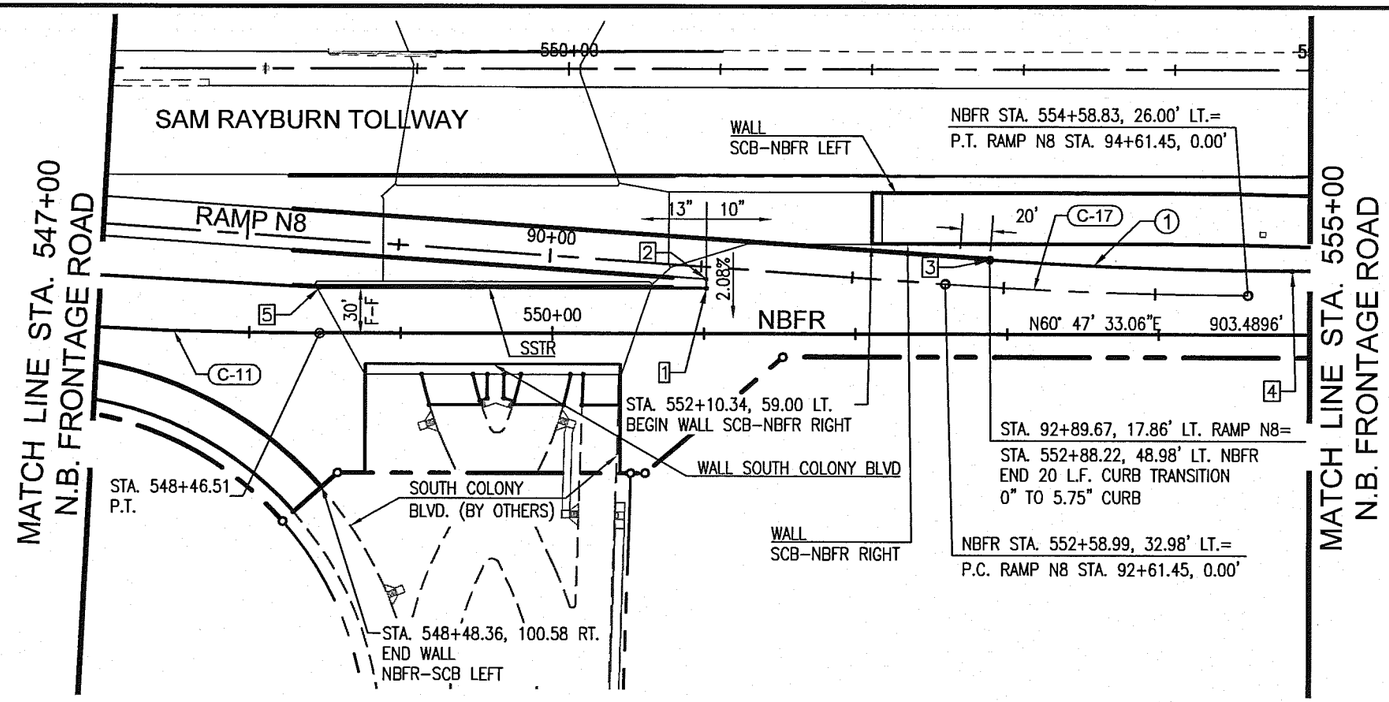

NOTE: ALL DIMENSIONS ARE TO FACE OF CURB UNLESS OTHERWISE NOTED.

CURVE DATA

Curve #	Δ	D	R	T	L
C-11	3°00'00.00"	2°00'00.00"	2864.7900'	75.0172'	150.0001'
C-17	4°00'00.00"	2°00'00.00"	2864.7900'	100.0407'	200.0001'
1	4°00'00.01"	2°00'00.00"	2864.7900'	100.0408'	200.0003'

TABLE OF PAVING ELEVATIONS

POINT #	STATION	OFFSET	ELEV.
1	551+01.37	30.00' LT.	608.92
2	551+01.37	35.98' LT.	609.04
3	552+88.22	48.98' LT.	609.12
4	554+88.06	42.00' LT.	612.16
5	548+46.51	30.00' LT.	609.86

GRAPHIC SCALE 1"=100'

0 100 200

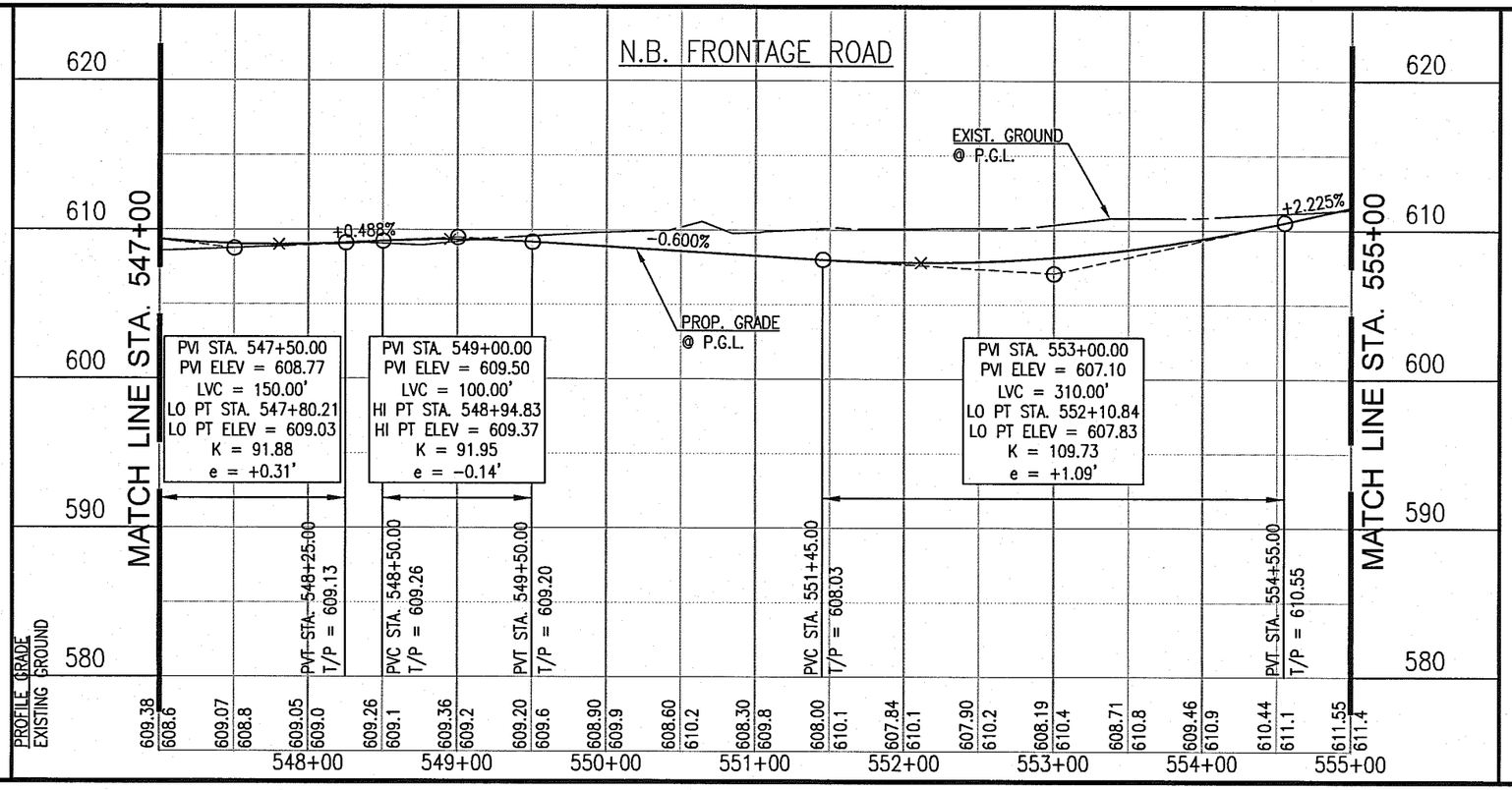

STATE OF TEXAS
JOSEPH PERKINS
97522
LICENSED
PROFESSIONAL ENGINEER
4/30/13

Graham Associates, Inc.
CONSULTING ENGINEERS & PLANNERS
600 SIX FLAGS DRIVE, SUITE 500
ARLINGTON, TEXAS 76011 (817) 640-8535
TBPE FIRM: F-1191/TBPLS FIRM: 101538-00

© 2013 Texas Department of Transportation

PLAN/PROFILE

S.H.-121
SAM RAYBURN TOLLWAY
AT SOUTH COLONY BLVD

N.B. FRONTAGE RAOD
STA. 547+00 TO STA. 555+00

SHEET 2 OF 3 SHEETS

FED. RD. DIV. NO.	STATE PROJECT NO.		SHEET NO.
6	(SEE TITLE SHEET)		155
STATE	DIST.	COUNTY	
TEXAS	DAL	DENTON	
CONTROL NO.	SECTION NO.	JOB NO.	HIGHWAY NO.
0364	03	095	S.H.-121

REV. NO.	C.O. NO.	DESCRIPTION	DATE	BY

PLOTTED BY: BLAKE BRADLEY
PLOTTED ON: 4/23/2013 10:46 AM
FILE NAME: J:\COLONY\SH-121\CAD\SHEETS\PAVING SHEETS\NBFR-547+00TO555+00.DWG

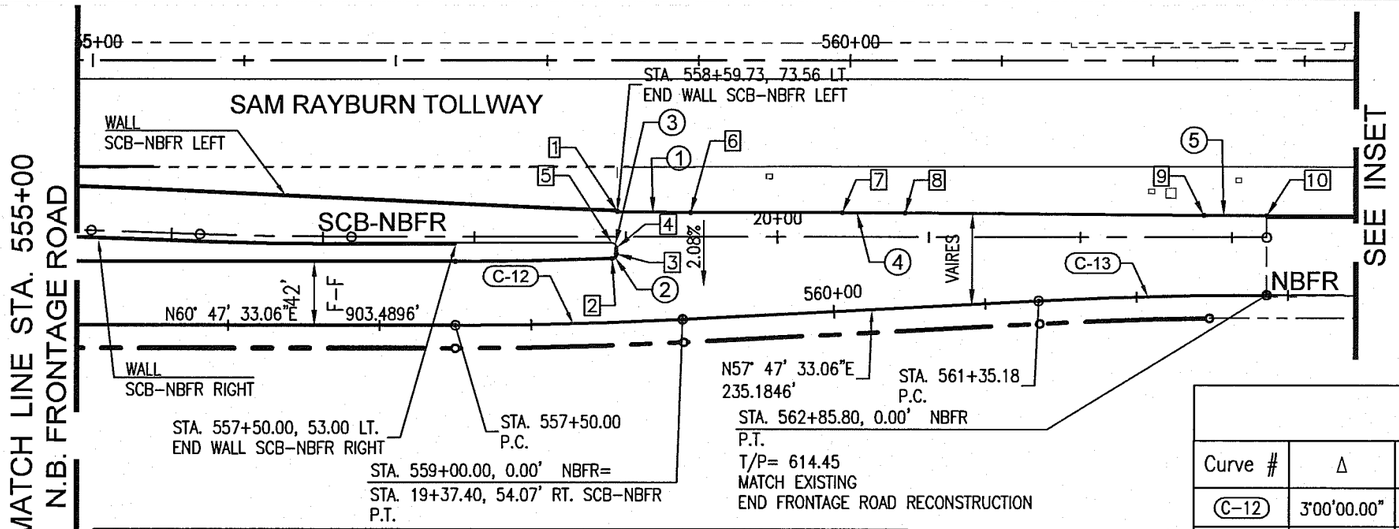

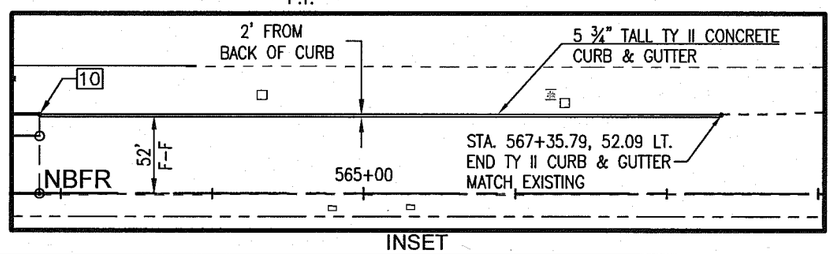

NOTE: ALL DIMENSIONS ARE TO FACE OF CURB UNLESS OTHERWISE NOTED.

TABLE OF PAVING ELEVATIONS

POINT #	STATION	OFFSET	ELEV.
1	558+59.69	72.56' LT.	616.55
2	558+54.95	42.00' LT.	615.94
3	558+57.99	44.89' LT.	615.99
4	558+58.15	48.99' LT.	616.07
5	558+55.21	52.10' LT.	616.15
6	559+08.78	69.71' LT.	616.20
7	560+08.64	64.48' LT.	615.49
8	560+50.21	62.15' LT.	615.21
9	562+44.91	52.54' LT.	615.36
10	562+85.80	52.10' LT.	615.53

CURVE DATA

Curve #	Δ	D	R	T	L
C-12	3°00'00.00"	2°00'00.00"	2864.7900'	75.0172'	150.0001'
C-13	3°00'21.11"	1°59'44.50"	2870.9700'	75.3260'	150.6174'
1	1°26'53.44"	3°00'22.67"	1905.8593'	24.0870'	48.1715'
2	87°54'03.59"	———	3.0000'	2.8921'	4.6025'
3	90°00'00.02"	———	3.0000'	3.0000'	4.7124'
4	0°24'58.59"	1°00'00.00"	5729.5800'	20.8139'	41.6276'
5	0°24'58.59"	1°00'00.00"	5729.5800'	20.8139'	41.6276'

GRAPHIC SCALE 1"=100'

0 100 200

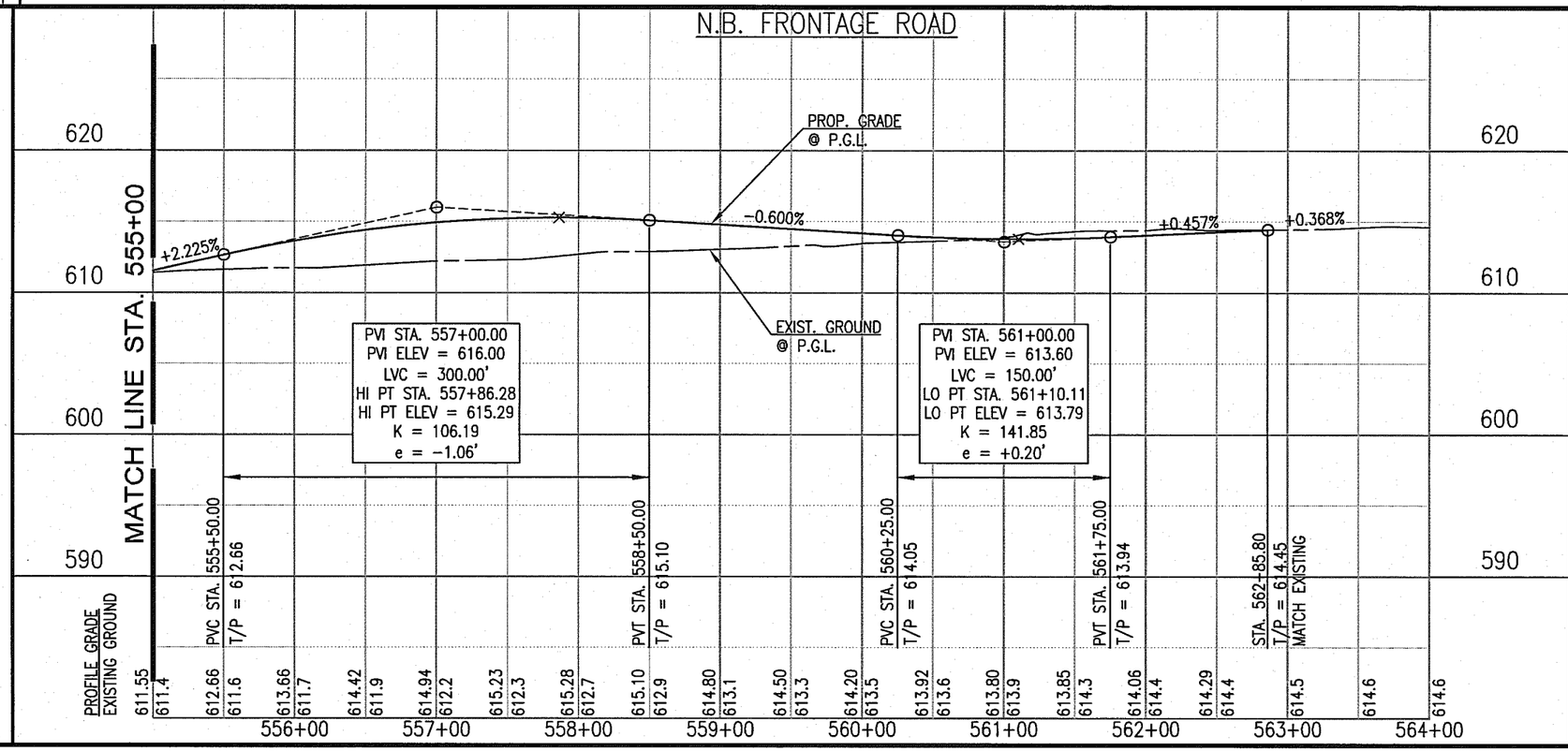

STATE OF TEXAS
JOSEPH PERKINS
97522
LICENSED
PROFESSIONAL ENGINEER
4/30/13

Graham Associates, Inc.
CONSULTING ENGINEERS & PLANNERS
600 SIX FLAGS DRIVE, SUITE 500
ARLINGTON, TEXAS 76011 (817) 640-8535
TBPE FIRM: F-1191/TBPLS FIRM: 101538-00

© 2013 Texas Department of Transportation

PLAN/PROFILE

S.H.-121
(SAM RAYBURN TOLLWAY)
AT SOUTH COLONY BLVD

N.B. FRONTAGE ROAD
STA. 555+00 TO STA. 562+85.80

SHEET 3 OF 3 SHEETS

FED. RD. DIV. NO.	STATE PROJECT NO.		SHEET NO.
6	(SEE TITLE SHEET)		156
STATE	DIST.	COUNTY	
TEXAS	DAL	DENTON	
CONTROL NO.	SECTION NO.	JOB NO.	HIGHWAY NO.
0364	03	095	S.H.-121

REV. NO.	C.O. NO.	DESCRIPTION	DATE	BY

PLOTTED BY: BLAKE BRADLEY
PLOTTED ON: 4/23/2013 10:22 AM
FILE NAME: J:\COLONY\SH-121\CAD\SHEETS\PAVING SHEETS\NBFR-555+00TO562+85.80.DWG

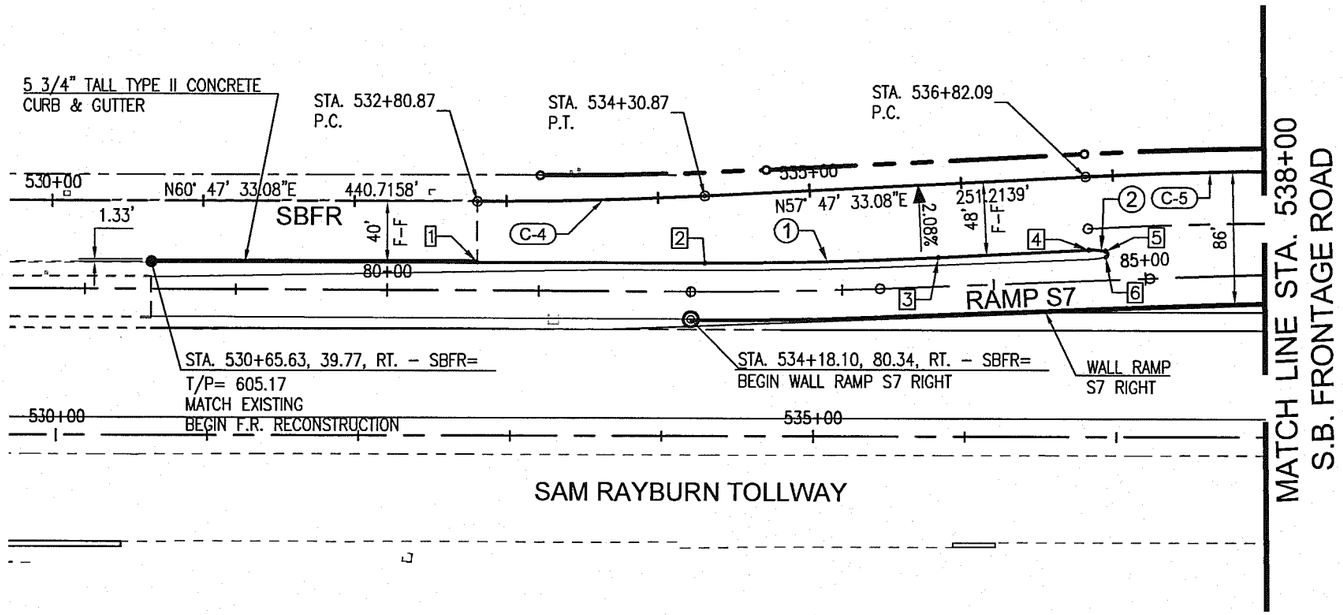

CURVE DATA

Curve #	Δ	D	R	T	L
C-4	3°00'00.00"	2°00'00.00"	2864.7900'	75.0172'	150.0000'
C-5	3°00'00.00"	2°00'00.00"	2864.7900'	75.0172'	150.0001'
1	3°01'58.83"	1°58'15.97"	2906.7900'	76.9548'	153.8737'
2	13°06'32.20"	–	48.0000'	5.5151'	10.9821'

TABLE OF PAVING ELEVATIONS

POINT #	STATION	OFFSET	ELEV.
1	532+81.05	39.90' RT.	604.53
2	534+28.89	43.93' RT.	603.92
3	535+82.66	48.00' RT.	604.17
4	536+82.09	48.00' RT.	604.76
5	536+93.16	49.23' RT.	604.85
6	536+93.16	53.13' RT.	604.93

NOTE: CROSS SLOPE FOR S.B. FRONTAGE ROAD IS 2.08% (USUAL)
ALL DIMENSIONS ARE TO FACE OF CURB UNLESS OTHERWISE NOTED.

GRAPHIC SCALE 1"=100'

0 100 200

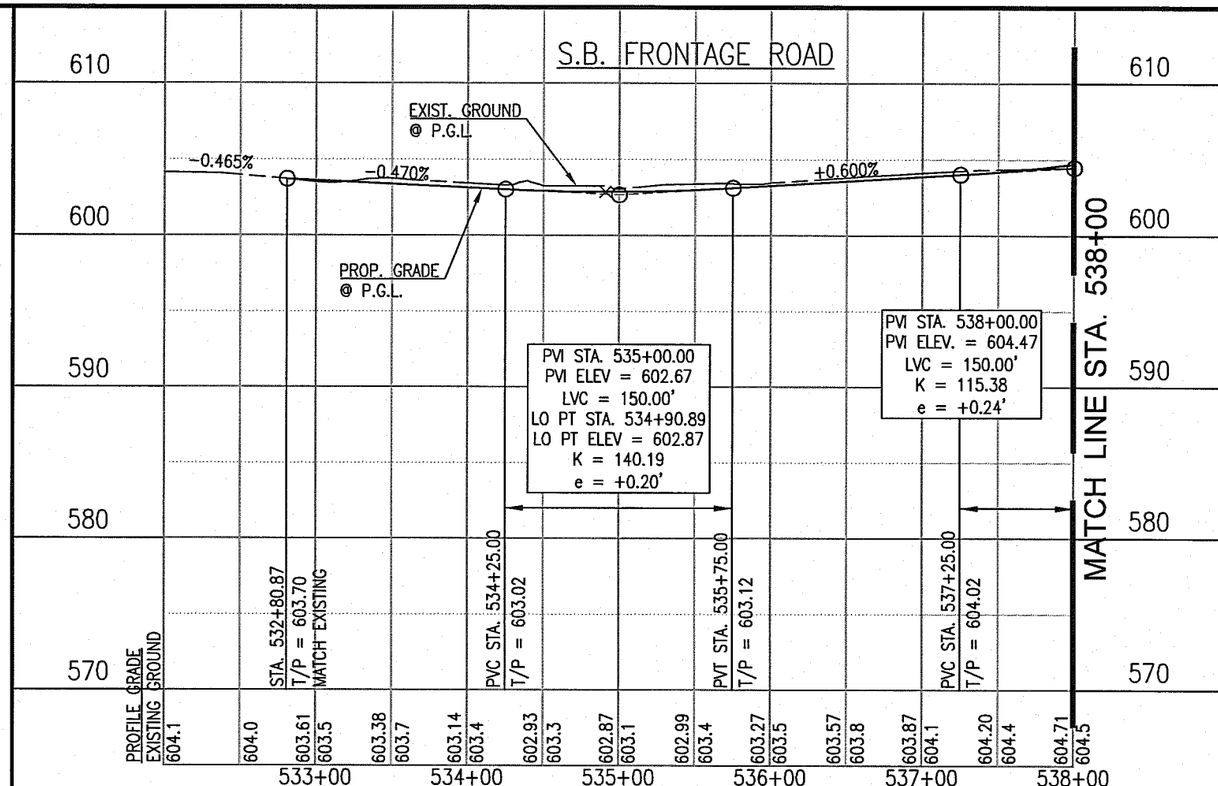

STATE OF TEXAS
JOSEPH PERKINS
97522
LICENSED
PROFESSIONAL ENGINEER
4/30/13

Graham Associates, Inc.
CONSULTING ENGINEERS & PLANNERS
600 SIX FLAGS DRIVE, SUITE 500
ARLINGTON, TEXAS 76011 (817) 640-8535
TBPE FIRM: F-1191/TBPLS FIRM: 101539-00

© 2013 Texas Department of Transportation

PLAN/PROFILE

S.H.-121
(SAM RAYBURN TOLLWAY)
AT SOUTH COLONY BLVD

S.B. FRONTAGE ROAD
STA. 530+65.63 TO STA. 538+00

SHEET 1 OF 4 SHEETS

FED. RD. DIV. NO.	STATE PROJECT NO.		SHEET NO.
6	(SEE TITLE SHEET)		157
STATE	DIST.	COUNTY	
TEXAS	DAL	DENTON	
CONTROL NO.	SECTION NO.	JOB NO.	HIGHWAY NO.
0364	03	095	S.H.-121

REV. NO.	C.O. NO.	DESCRIPTION	DATE	BY

PLOTTED BY: BLAKE BRADLEY
PLOTTED ON: 4/23/2013 10:33 AM
FILE NAME: J:\COLONY\SH-121\CAD\SHEETS\PAVING SHEETS\SBFR-532+81.19TO538+00.DWG

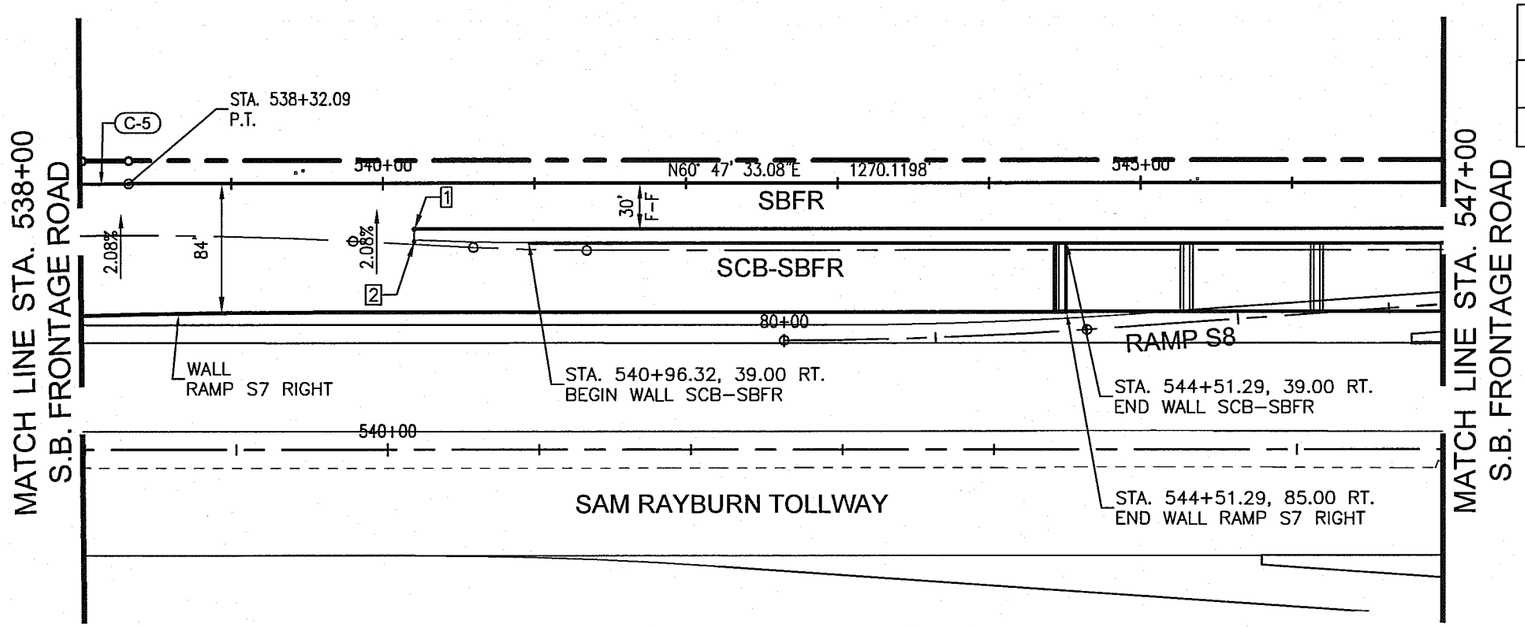

CURVE DATA

Curve #	Δ	D	R	T	L
C-5	3°00'00.00"	2°00'00.00"	2864.7900'	75.0172'	150.0001'

TABLE OF PAVING ELEVATIONS

POINT #	STATION	OFFSET	ELEV.
1	540+20.75	30.00' RT.	609.29
2	540+20.75	38.00' RT.	609.46

NOTE: CROSS SLOPE FOR S.B. FRONTAGE ROAD IS 2.08% (USUAL)
ALL DIMENSIONS ARE TO FACE OF CURB UNLESS OTHERWISE NOTED.

GRAPHIC SCALE 1"=100'

0 100 200

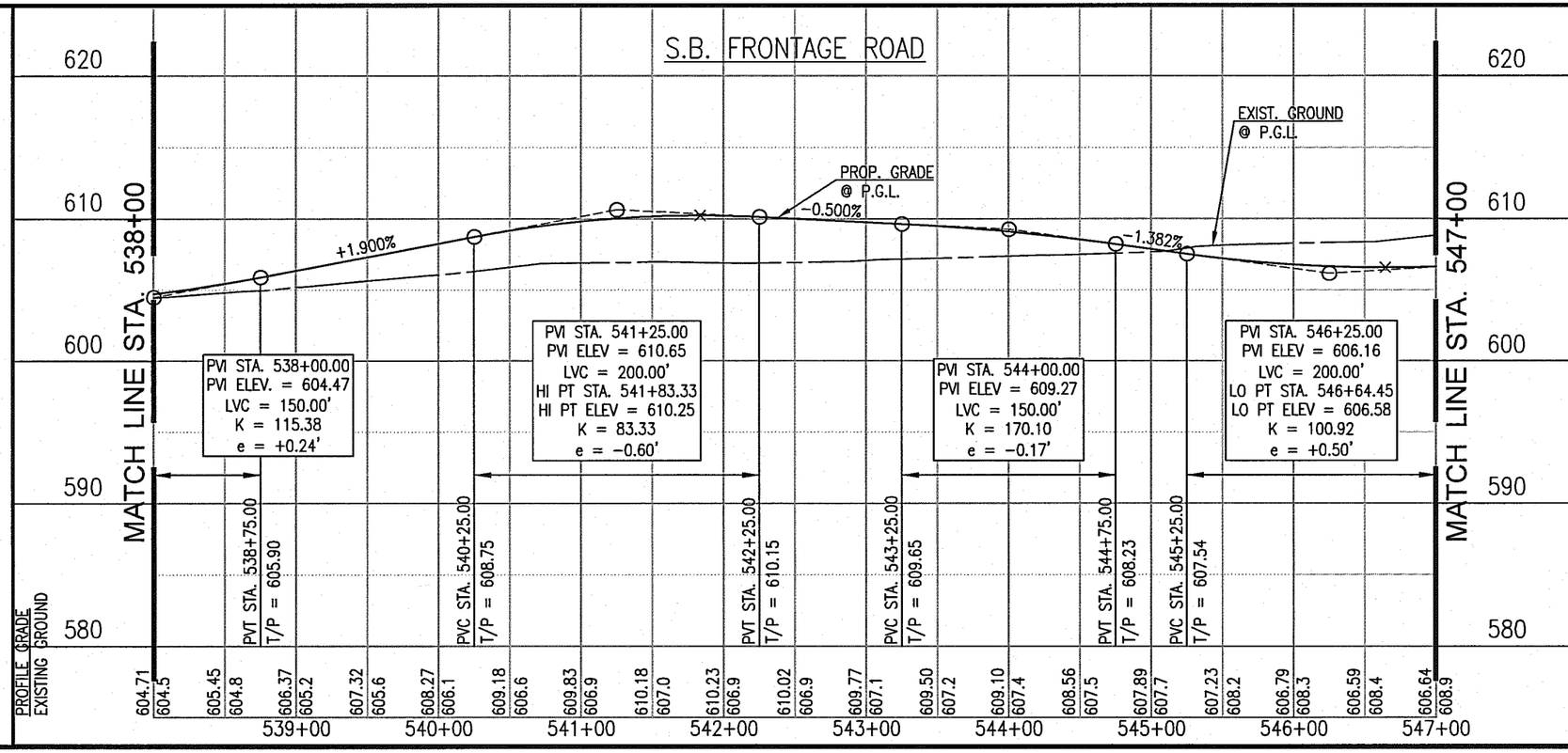

STATE OF TEXAS
JOSEPH PERKINS
97522
LICENSED
PROFESSIONAL ENGINEER
4/30/13

Graham Associates, Inc.
CONSULTING ENGINEERS & PLANNERS
600 SIX FLAGS DRIVE, SUITE 500
ARLINGTON, TEXAS 76011 (817) 640-8535
TBPE FIRM: F-1191/TBPLS FIRM: 101538-00

© 2013 Texas Department of Transportation

PLAN/PROFILE

S.H.-121
(SAM RAYBURN TOLLWAY)
AT SOUTH COLONY BLVD

S.B. FRONTAGE ROAD
STA. 538+00 TO STA. 547+00

SHEET 2 OF 4 SHEETS

FED. RD. DIV. NO.	STATE PROJECT NO.		SHEET NO.
6	(SEE TITLE SHEET)		158
STATE	DIST.	COUNTY	
TEXAS	DAL	DENTON	
CONTROL NO.	SECTION NO.	JOB NO.	HIGHWAY NO.
0364	03	095	S.H.-121

REV. NO.	C.O. NO.	DESCRIPTION	DATE	BY

PLOTTED BY: BLAKE BRADLEY
PLOTTED ON: 4/23/2013 2:07 PM
FILE NAME: J:\COLONY\SH-121\CAD\SHEETS\PAVING SHEETS\SBFR-538+00TO547+00.DWG

REV. NO.	C.O. NO.	DESCRIPTION	DATE	BY

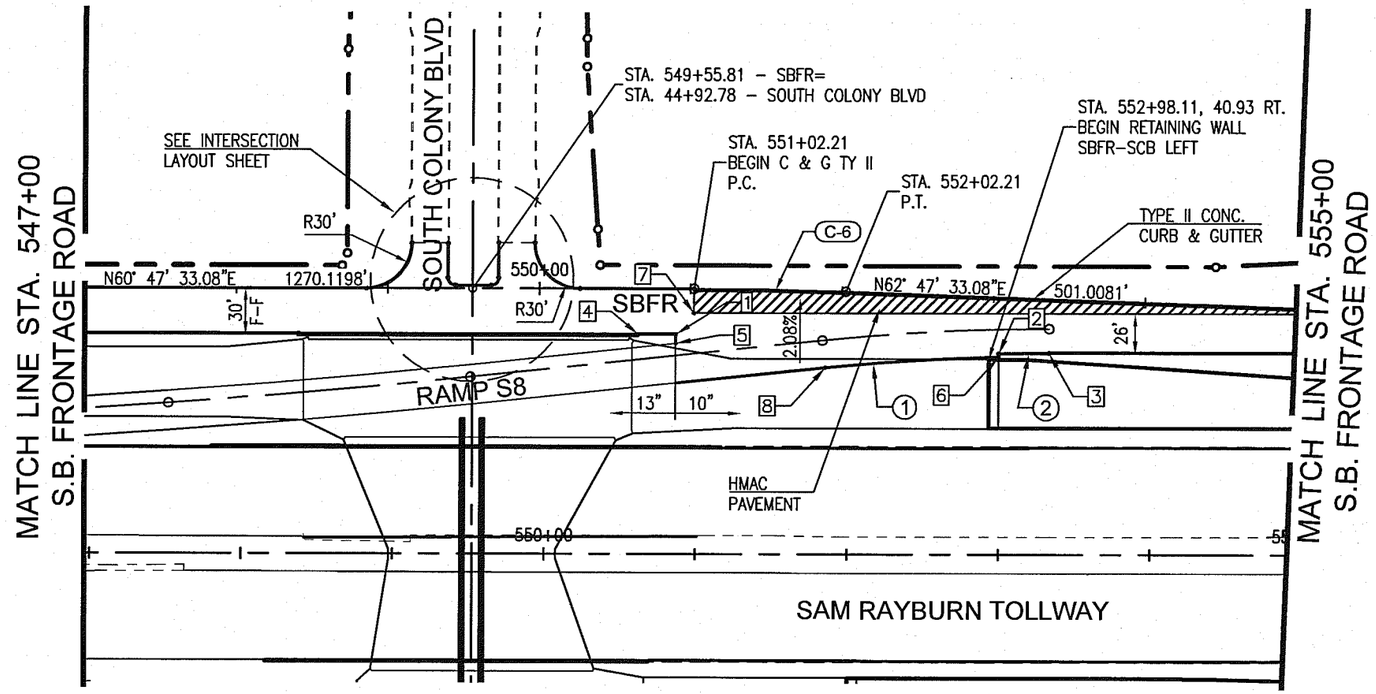

CURVE DATA					
Curve #	Δ	D	R	T	L
C-6	2°00'00.00"	2°00'00.00"	2864.7900'	50.0051'	100.0000'
1	4°39'21.12"	4°03'03.26"	1414.3943'	57.4986'	114.9340'
2	1°20'38.71"	4°02'42.67"	1416.3944'	16.6142'	33.2268'

TABLE OF PAVING ELEVATIONS			
POINT #	STATION	OFFSET	ELEV.
1	550+90.25	30.00' RT.	607.86
2	553+04.73	37.09' RT.	611.24
3	553+37.92	35.54' RT.	612.13
4	550+65.36	30.00' RT.	607.80
5	550+90.25	35.96' RT.	607.99
6	553+04.85	39.09' RT.	611.28
7	551+02.21	16.00' RT.	607.63
8	551+90.30	50.42' RT.	609.20

NOTE: ALL DIMENSIONS ARE TO FACE OF CURB UNLESS OTHERWISE NOTED.

GRAPHIC SCALE 1"=100'

0 100 200

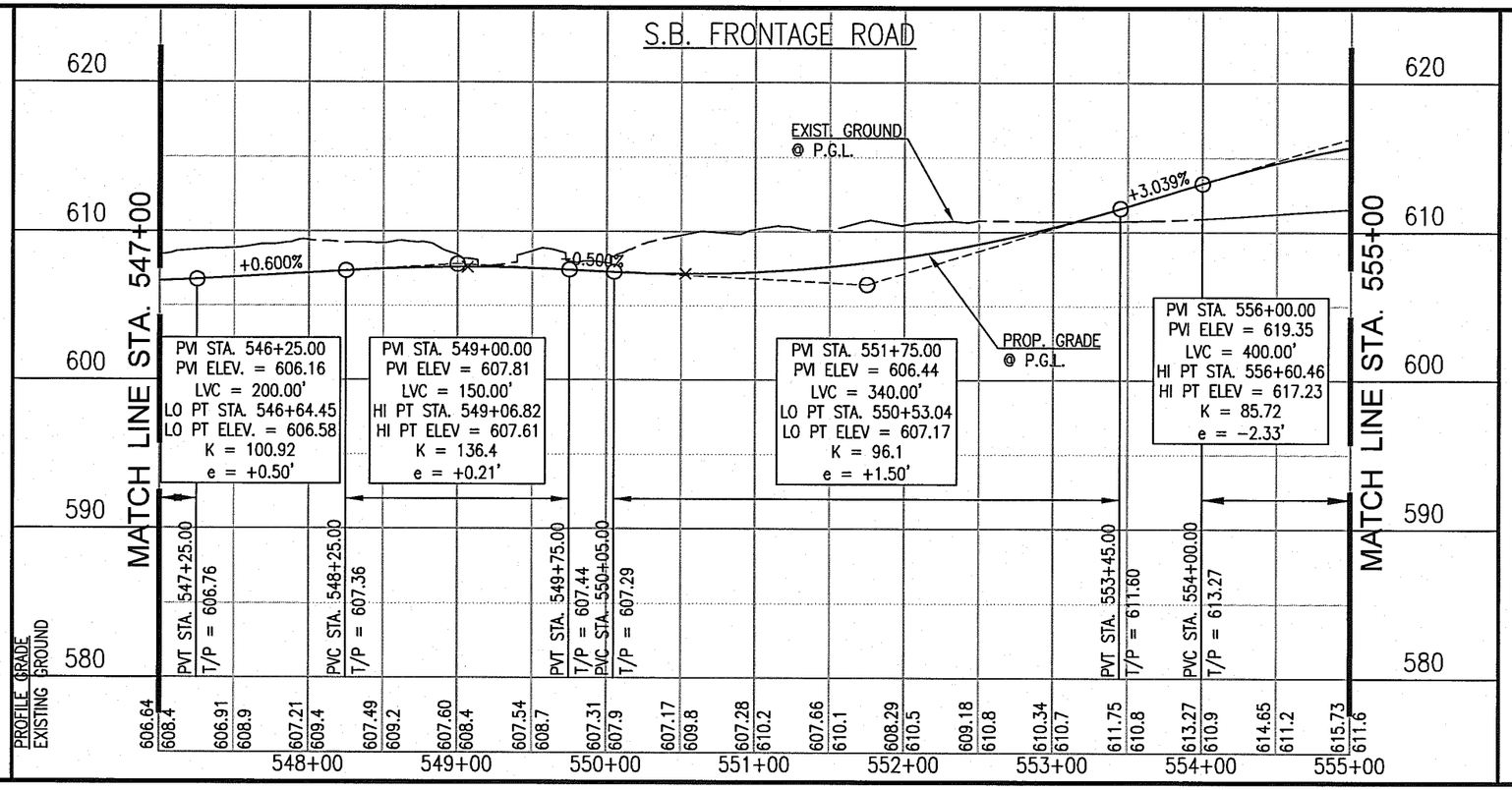

STATE OF TEXAS
JOSEPH PERKINS
97522
LICENSED PROFESSIONAL ENGINEER
4/30/13

Graham Associates, Inc.
CONSULTING ENGINEERS & PLANNERS
600 SIX FLAGS DRIVE, SUITE 500
ARLINGTON, TEXAS 76011 (817) 640-8535
TBPE FIRM: F-1191/TBPLS FIRM: 101538-00

© 2013 Texas Department of Transportation

PLAN/PROFILE

S.H.-121
(SAM RAYBURN TOLLWAY)
AT SOUTH COLONY BLVD

S.B. FRONTAGE ROAD
STA. 547+00 TO STA. 555+00

SHEET 3 OF 4 SHEETS

FED. RD. DIV. NO.	STATE PROJECT NO.		SHEET NO.
6	(SEE TITLE SHEET)		159
STATE	DIST.	COUNTY	
TEXAS	DAL	DENTON	
CONTROL NO.	SECTION NO.	JOB NO.	HIGHWAY NO.
0364	03	095	S.H.-121

PLOTTED BY: BLAKE BRADLEY
PLOTTED ON: 4/23/2013 10:14 AM
FILE NAME: J:\COLONY\SH-121\CAD\SHEETS\PAVING SHEETS\SBFR-547+00TO555+00.DWG

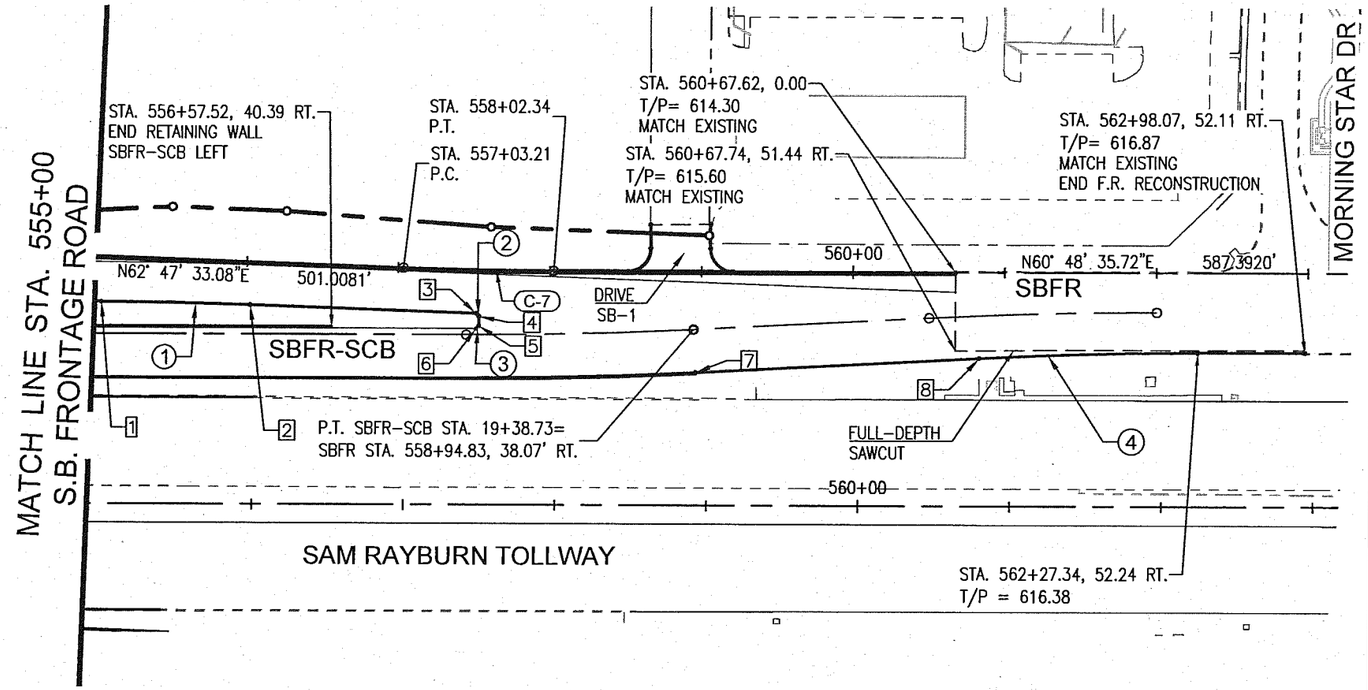

CURVE DATA

Curve #	Δ	D	R	T	L
C-7	1°58'57.36"	2°00'00.00"	2864.7900'	49.5699'	99.1300'
1	2°00'00.00"	2°01'47.12"	2822.7900'	49.2720'	98.5340'
2	88°55'08.29"	–	2.0000'	1.9626'	3.1039'
3	88°57'22.44"	–	2.0000'	1.9639'	3.1052'
4	2°54'35.22"	2°01'11.06"	2836.7900'	72.0491'	144.0672'

TABLE OF PAVING ELEVATIONS

POINT #	STATION	OFFSET	ELEV.
1	555+04.60	29.72' RT.	616.43
2	556+03.11	28.00' RT.	617.62
3	557+51.79	28.42' RT.	617.33
4	557+53.73	30.41' RT.	617.35
5	557+53.74	36.48' RT.	617.48
6	557+51.81	38.49' RT.	617.55
7	558+96.30	66.03' RT.	616.03
8	560+83.34	56.17' RT.	615.79

GRAPHIC SCALE 1"=100'

0 100 200

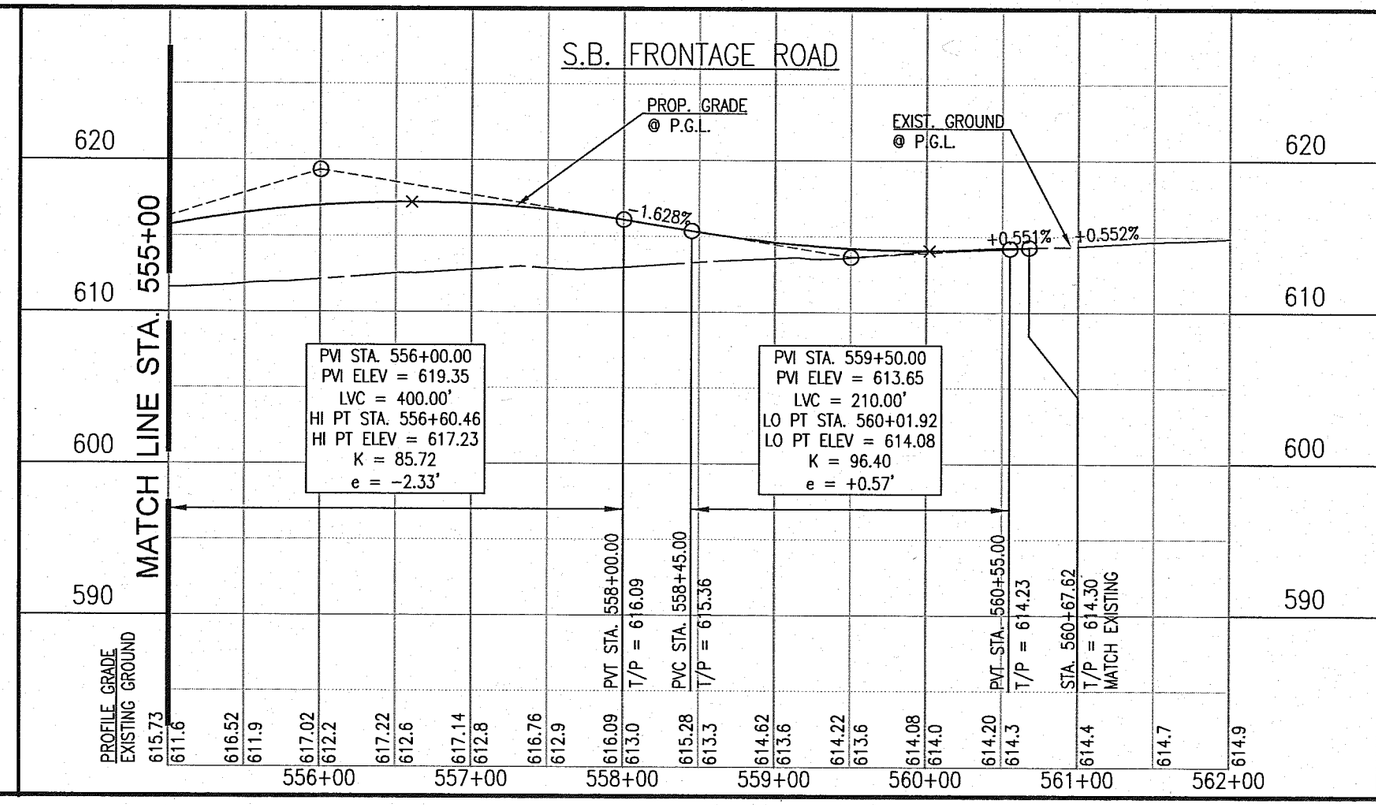

PROFILE SCALE:
1" =100' HORZ.
1" = 10' VERT.

STATE OF TEXAS
JOSEPH PERKINS
97522
LICENSED PROFESSIONAL ENGINEER
3/15/13

Graham Associates, Inc.
CONSULTING ENGINEERS & PLANNERS
600 SIX FLAGS DRIVE, SUITE 500
ARLINGTON, TEXAS 76011 (817) 640-8535
TBPE FIRM: F-1191/TBPLS FIRM: 101538-00

© 2013 Texas Department of Transportation

PLAN/PROFILE

S.H.-121
(SAM RAYBURN TOLLWAY)
AT SOUTH COLONY BLVD

S.B. FRONTAGE ROAD
STA. 555+00 O STA. 562+98.07

SHEET 4 OF 4 SHEETS

FED. RD. DIV. NO.	STATE PROJECT NO.		SHEET NO.
6	(SEE TITLE SHEET)		160
STATE	DIST.	COUNTY	
TEXAS	DAL	DENTON	
CONTROL NO.	SECTION NO.	JOB NO.	HIGHWAY NO.
0364	03	095	S.H.-121

REV. NO.	C.O. NO.	DESCRIPTION	DATE	BY

PLOTTED BY: JOE PERKINS
PLOTTED ON: 3/10/2013 11:53 AM
FILE NAME: J:\COLONY\SH-121\CAD\SHEETS\PAVING SHEETS\SBFR-555+00TO560+67.15.DWG

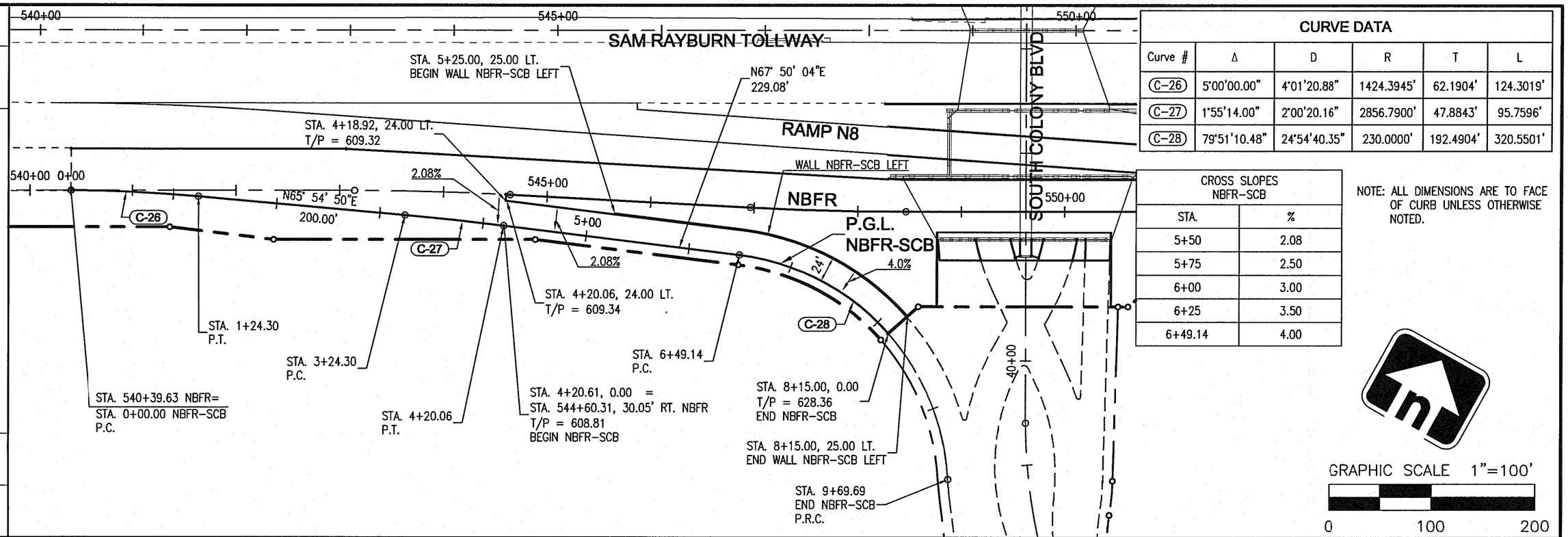

CURVE DATA					
Curve #	Δ	D	R	T	L
C-26	5°00'00.00"	4°01'20.88"	1424.3945'	62.1904'	124.3019'
C-27	1°55'14.00"	2°00'20.16"	2856.7900'	47.8843'	95.7596'
C-28	79°51'10.48"	24°54'40.35"	230.0000'	192.4904'	320.5501'

CROSS SLOPES NBFR-SCB	
STA.	%
5+50	2.08
5+75	2.50
6+00	3.00
6+25	3.50
6+49.14	4.00

NOTE: ALL DIMENSIONS ARE TO FACE OF CURB UNLESS OTHERWISE NOTED.

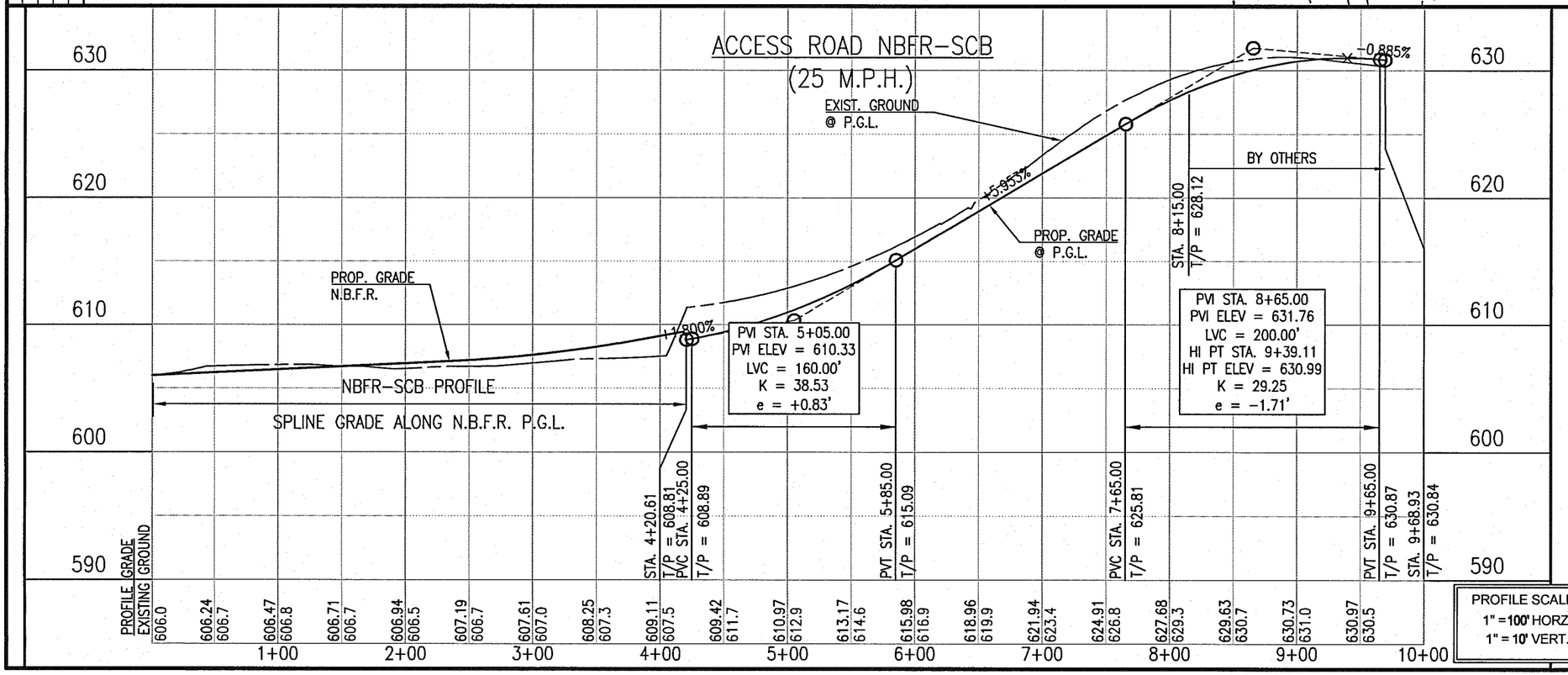

STATE OF TEXAS
JOSEPH PERKINS
97522
LICENSED PROFESSIONAL ENGINEER
4/30/13

Graham Associates, Inc.
CONSULTING ENGINEERS & PLANNERS
600 SIX FLAGS DRIVE, SUITE 500
ARLINGTON, TEXAS 76011 (817) 640-8535
TBPE FIRM: F-1191/TBPLS FIRM: 101538-00

© 2013 Texas Department of Transportation

PLAN/PROFILE

S.H.-121
(SAM RAYBURN TOLLWAY)
AT SOUTH COLONY BLVD.

ACCESS ROAD NBFR-SCB
STA. 4+20.61 TO STA. 8+15

SHEET 1 OF 1 SHEETS

FED. RD. DIV. NO.	STATE PROJECT NO.		SHEET NO.
6	(SEE TITLE SHEET)		161
STATE	DIST.	COUNTY	
TEXAS	DAL	DENTON	
CONTROL NO.	SECTION NO.	JOB NO.	HIGHWAY NO.
0364	03	095	S.H.-121

REV. NO. | C.O. NO. | DESCRIPTION | DATE | BY

PLOTTED BY: CLAUDIA FERNANDEZ
PLOTTED ON: 4/22/2013 10:33 AM
FILE NAME: J:\COLONY\SH-121\CAD\SHEETS\PAVING SHEETS\NBFR-SCB.DWG
SHEET SIZE: 11" X 17" 1" = 1"

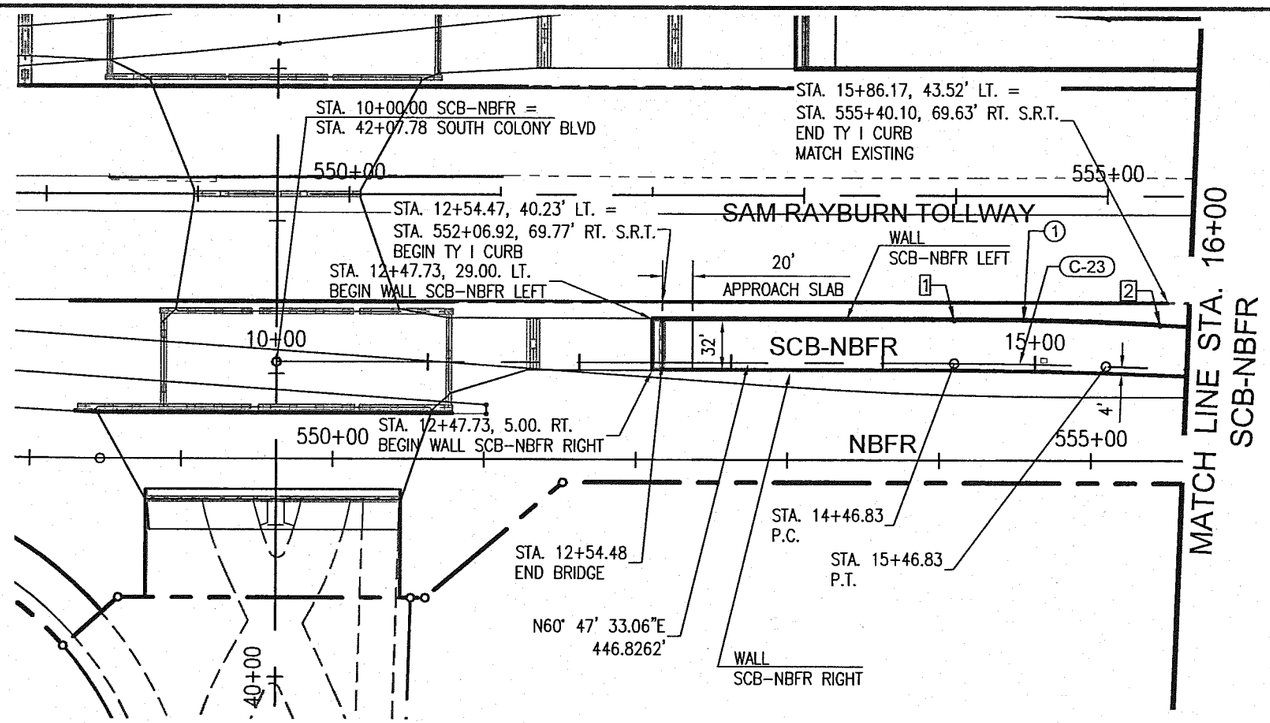

CURVE DATA

Curve #	Δ	D	R	T	L
C-23	2°00'00.00"	2°00'00.00"	2864.7900'	50.0051'	100.0000'
1	2°41'29.68"	1°58'47.84"	2892.7900'	67.9597'	135.8943'

TABLE OF PAVING ELEVATIONS

POINT #	STATION	OFFSET	ELEV.
1	14+46.83	28.00' LT.	629.65
2	15+81.74	27.79' LT.	624.44

GRAPHIC SCALE 1"=100'

0 100 200

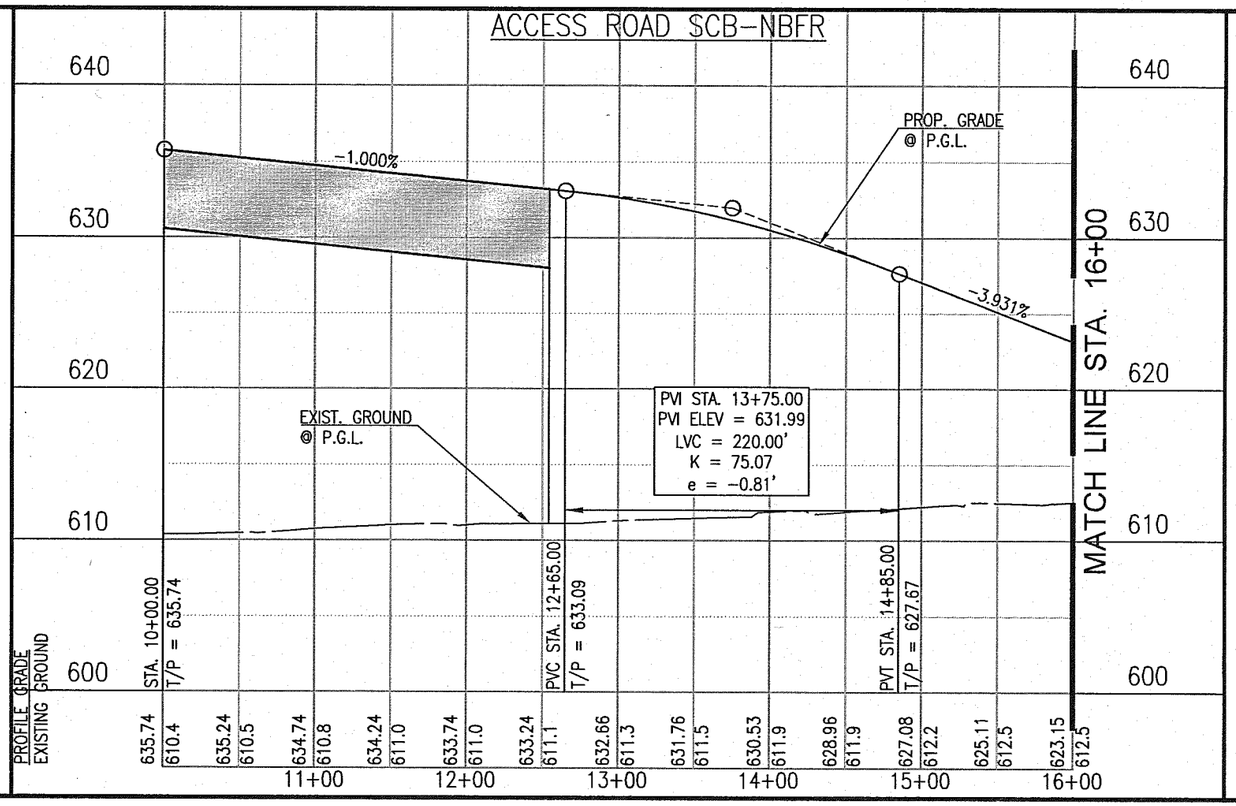

PROFILE SCALE:
1" = 100' HORZ.
1" = 10' VERT.

STATE OF TEXAS
JOSEPH PERKINS
97522
LICENSED
PROFESSIONAL ENGINEER
3/15/13

Graham Associates, Inc.
CONSULTING ENGINEERS & PLANNERS
600 SIX FLAGS DRIVE, SUITE 500
ARLINGTON, TEXAS 76011 (817) 640-8535
TBPE FIRM: F-1191/TBPLS FIRM: 101538-00

© 2013 Texas Department of Transportation

PLAN/PROFILE

S.H.-121
(SAM RAYBURN TOLLWAY)
AT SOUTH COLONY BLVD

ACCESS ROAD SCB-NBFR
STA. 10+00 TO STA. 16+00

SHEET 1 OF 2 SHEETS

FED. RD. DIV. NO.	STATE PROJECT NO.		SHEET NO.
6	(SEE TITLE SHEET)		162
STATE	DIST.	COUNTY	
TEXAS	DAL	DENTON	
CONTROL NO.	SECTION NO.	JOB NO.	HIGHWAY NO.
0364	03	095	S.H.-121

REV. NO.	C.O. NO.	DESCRIPTION	DATE	BY

PLOTTED BY: JOE PERKINS
PLOTTED ON: 3/10/2013 12:10 PM
FILE NAME: J:\COLDAP\SH-121\CAD\SHEETS\PAVING SHEETS\SCB-NBFR-10+00TO16+00.DWG

REV. NO.	C.O. NO.	DESCRIPTION	DATE	BY

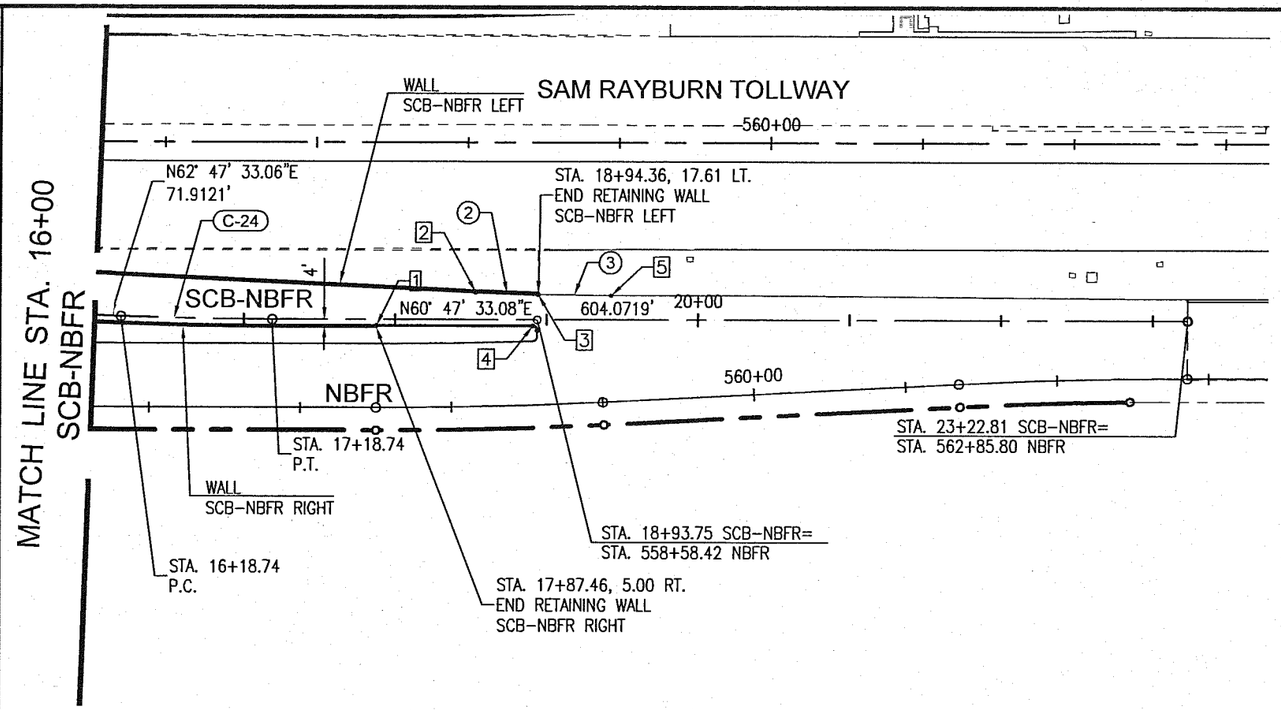

CURVE DATA

Curve #	Δ	D	R	T	L
C-24	1°59'59.98"	2°00'00.00"	2864.7900'	50.0050'	99.9998'
2	1°14'33.60"	3°00'22.67"	1905.8593'	20.6686'	41.3355'
3	1°26'53.44"	3°00'22.67"	1905.8593'	24.0870'	48.1715'

TABLE OF PAVING ELEVATIONS

POINT #	STATION	OFFSET	ELEV.
1	17+87.46	4.00' RT.	617.50
2	18+53.02	18.10' LT.	616.96
3	18+94.36	16.61' LT.	616.55
4	18+90.75	4.00' RT.	616.15
5	19+42.52	16.00' LT.	616.20

GRAPHIC SCALE 1"=100'

0 100 200

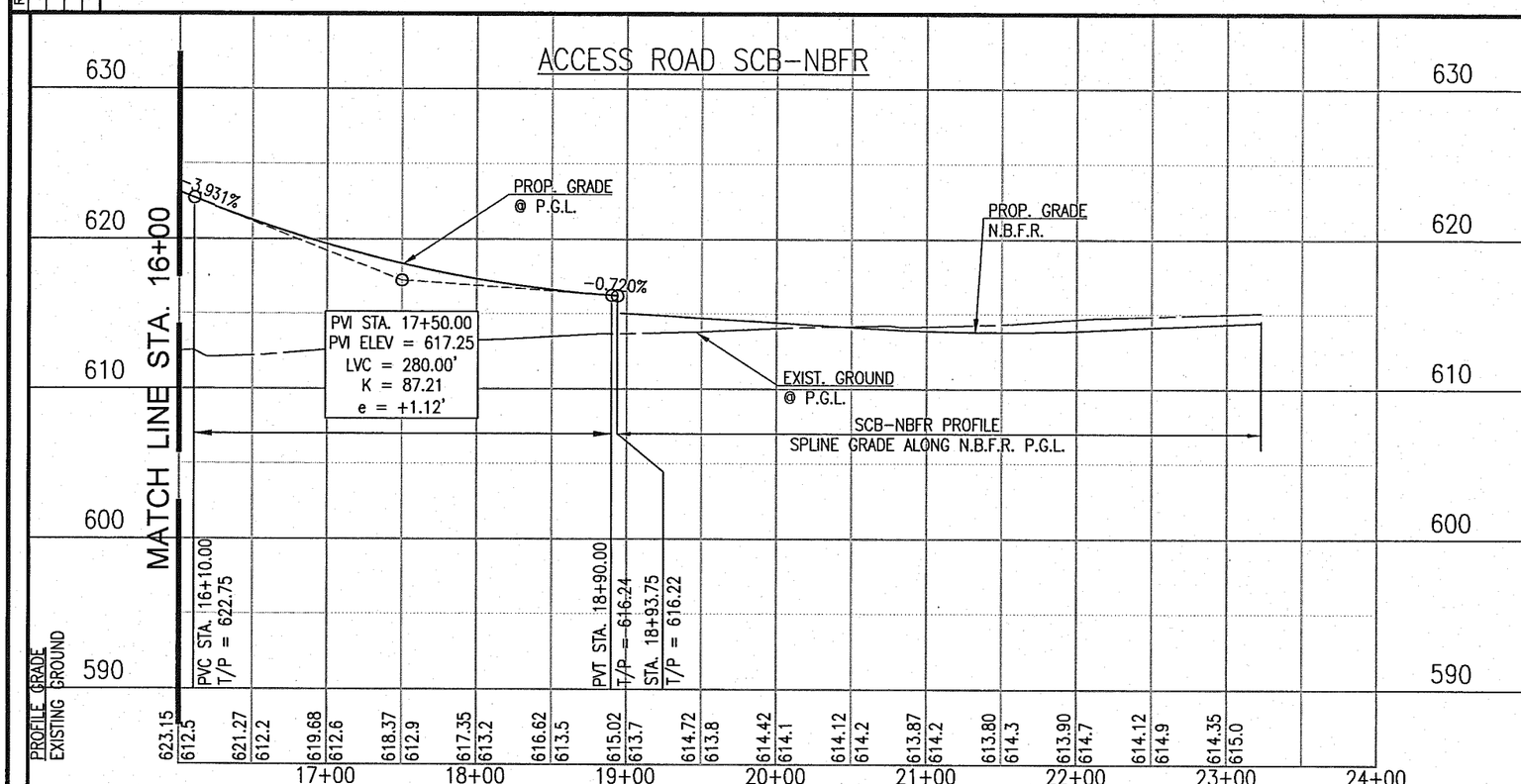

PROFILE SCALE:
1" = 100' HORZ.
1" = 10' VERT.

STATE OF TEXAS
JOSEPH PERKINS
97522
LICENSED
PROFESSIONAL ENGINEER
3/15/13

Graham Associates, Inc.
CONSULTING ENGINEERS & PLANNERS
600 SIX FLAGS DRIVE, SUITE 500
ARLINGTON, TEXAS 76011 (817) 640-8535
TBPE FIRM: F-1191/TBPLS FIRM: 101538-00

© 2013 Texas Department of Transportation

PLAN/PROFILE

S.H.-121
(SAM RAYBURN TOLLWAY)
AT SOUTH COLONY BLVD

ACCESS ROAD SCB-NBFR
STA. 16+00 TO STA. 23+22.81

SHEET 2 OF 2 SHEETS

FED. RD. DIV. NO.	STATE PROJECT NO.		SHEET NO.
6	(SEE TITLE SHEET)		163
STATE	DIST.	COUNTY	
TEXAS	DAL	DENTON	
CONTROL NO.	SECTION NO.	JOB NO.	HIGHWAY NO.
0364	03	095	S.H.-121

PLOTTED BY: JOE PERKINS
PLOTTED ON: 3/10/2013 12:17 PM
FILE NAME: J:\COLONY\SH-121\CAD\SHEETS\PAVING SHEETS\SCB-NBFR-16+00TOEND.DWG

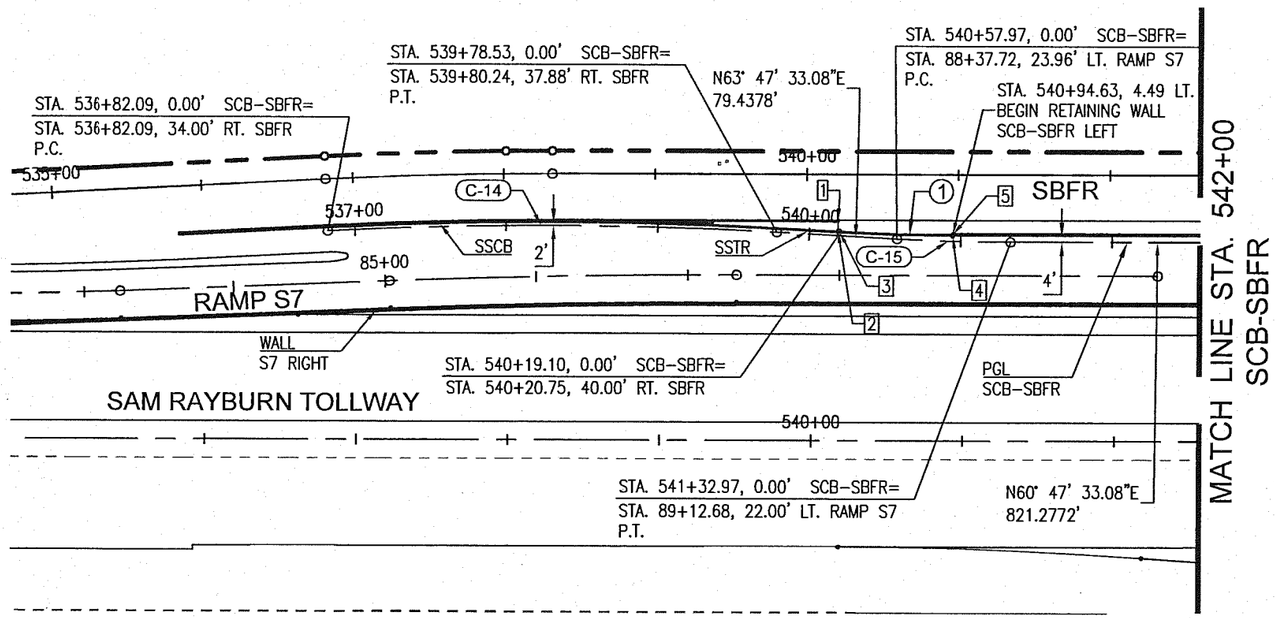

CURVE DATA

Curve #	Δ	D	R	T	L
C-14	6°00'00.00"	2°01'26.48"	2830.7900'	148.3554'	296.4396'
C-15	3°00'00.00"	3°59'59.99"	1432.3950'	37.5086'	75.0000'
1	3°00'00.00"	4°00'50.45"	1427.3945'	37.3776'	74.7382'

TABLE OF PAVING ELEVATIONS

POINT #	STATION	OFFSET	ELEV.
1	540+18.58	9.99' LT.	609.29
2	540+18.94	3.00' LT.	609.43
3	540+19.81	3.00' LT.	609.44
4	540+94.65	3.49' LT.	611.32
5	540+94.63	4.49' LT.	611.30

GRAPHIC SCALE 1"=100'

0 100 200

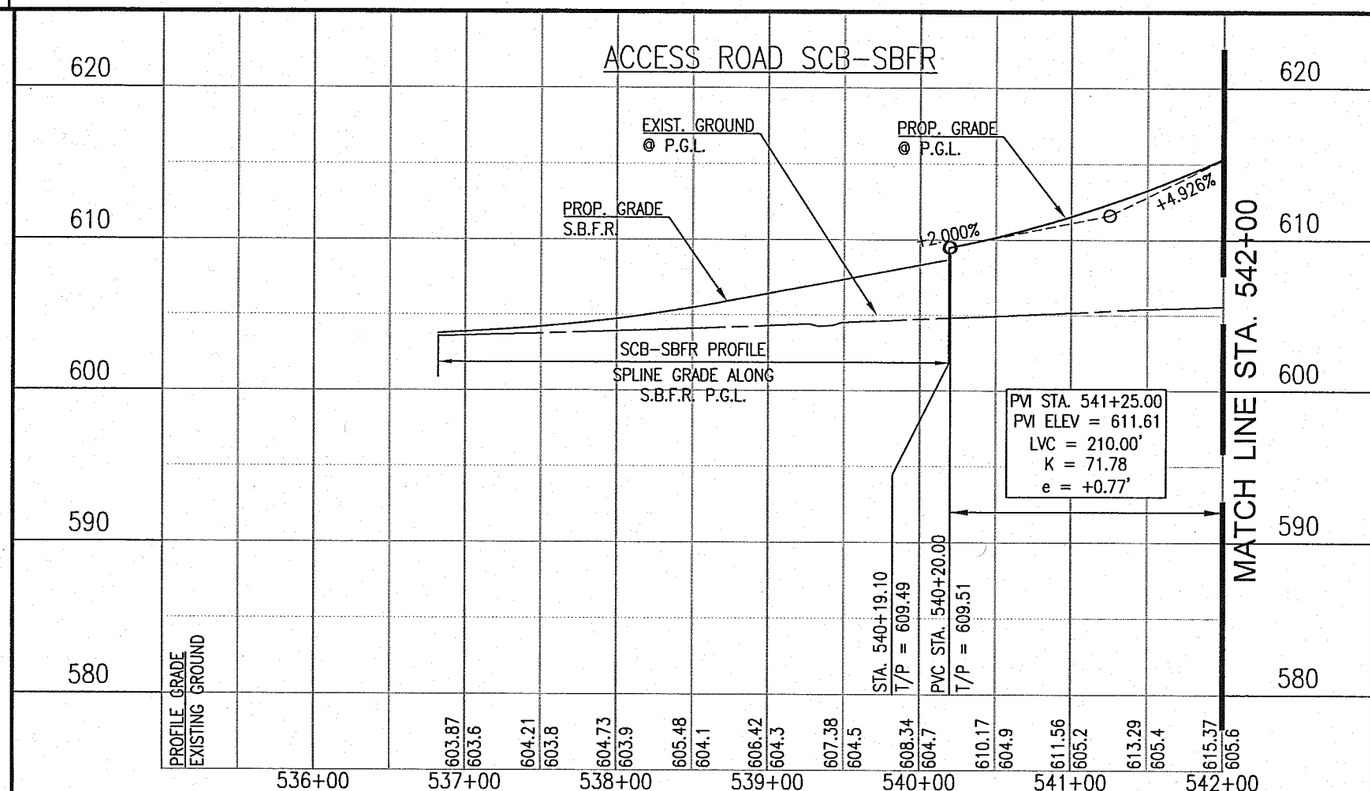

PROFILE SCALE:
1" = 100' HORZ.
1" = 10' VERT.

STATE OF TEXAS
JOSEPH PERKINS
97522
LICENSED PROFESSIONAL ENGINEER
3/15/13

Graham Associates, Inc.
CONSULTING ENGINEERS & PLANNERS
600 SIX FLAGS DRIVE, SUITE 500
ARLINGTON, TEXAS 76011 (817) 640-8535
TBPE FIRM: F-1191/TBPLS FIRM: 101538-00

© 2013 Texas Department of Transportation

PLAN/PROFILE

S.H.-121
(SAM RAYBURN TOLLWAY)
AT SOUTH COLONY BLVD

ACCESS ROAD SCB-SBFR
STA. 540+19.10 TO STA. 542+00

SHEET 1 OF 2 SHEETS

FED. RD. DIV. NO.	STATE PROJECT NO.		SHEET NO.
6	(SEE TITLE SHEET)		164
STATE	DIST.	COUNTY	
TEXAS	DAL	DENTON	
CONTROL NO.	SECTION NO.	JOB NO.	HIGHWAY NO.
0364	03	095	S.H.-121

REV. NO.	C.O. NO.	DESCRIPTION	DATE	BY

PLOTTED BY: JOE PERKINS
PLOTTED ON: 3/10/2013 12:31 PM
FILE NAME: J:\COLONY\SH-121\CAD\SHEETS\PAVING SHEETS\SCB-SBFR-536+53.78TO542+00.DGN

REV. NO.	C.O. NO.	DESCRIPTION	DATE	BY

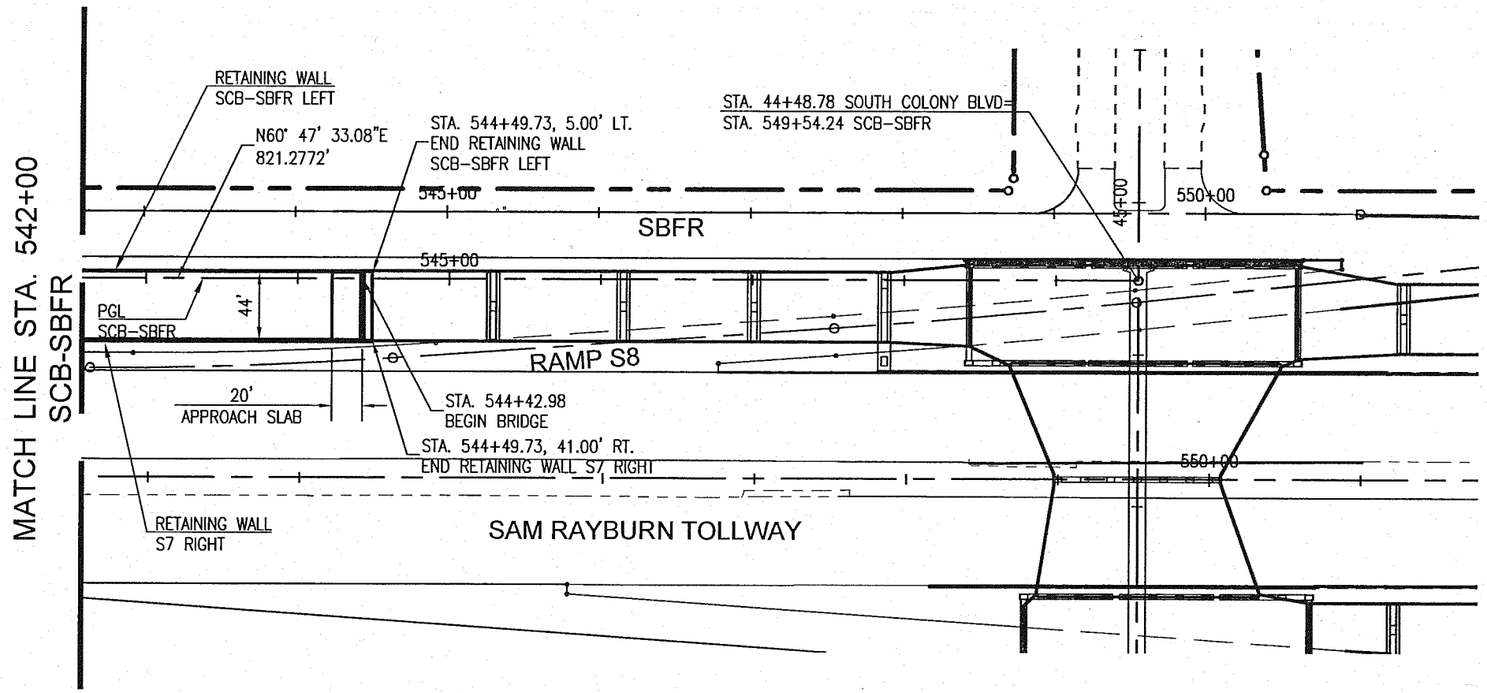

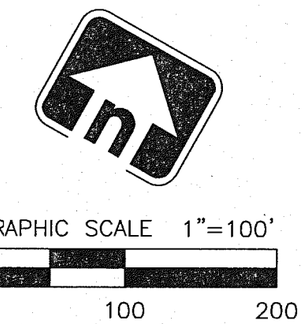

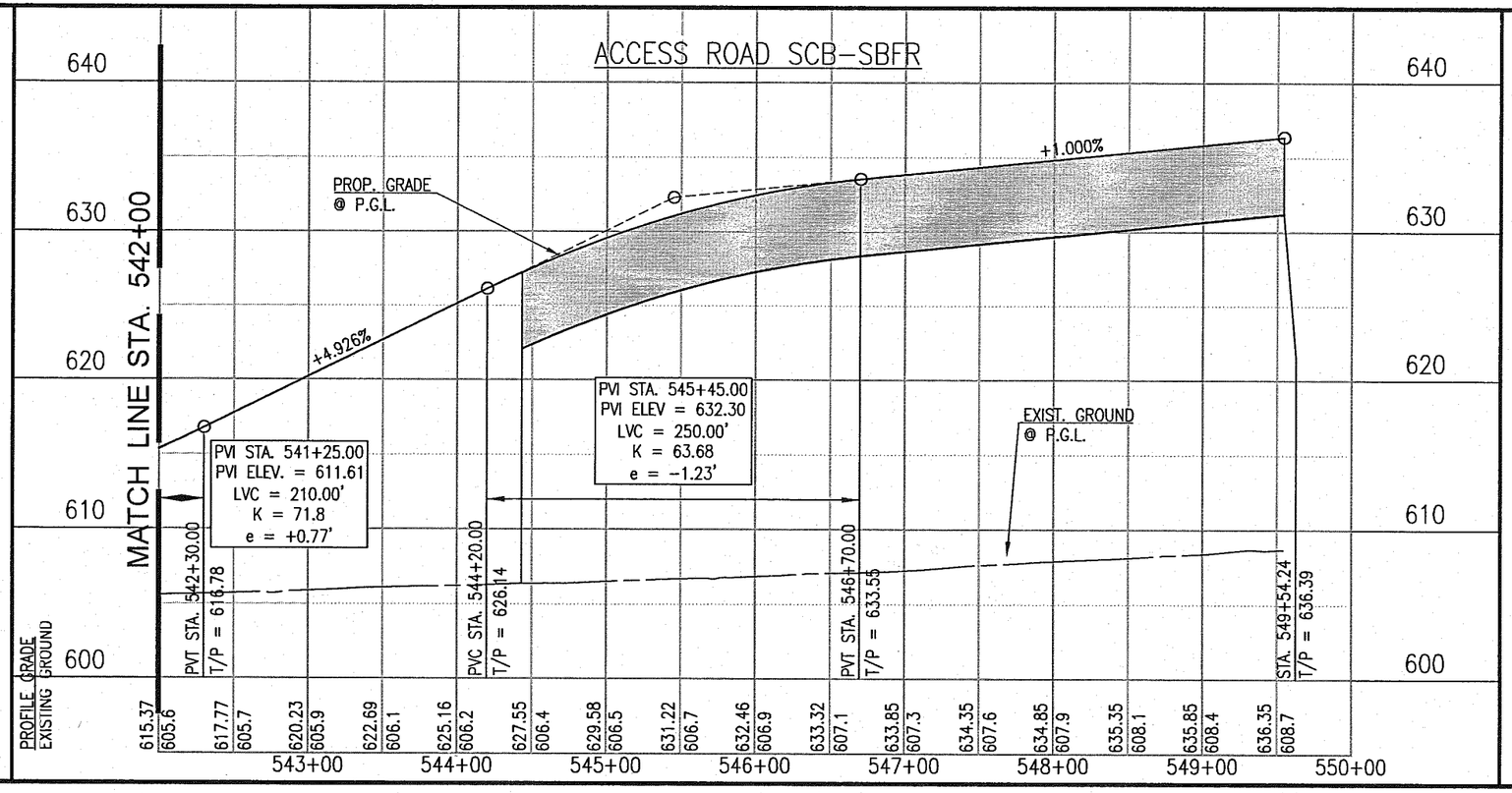

PROFILE SCALE:
1" = 100' HORZ.
1" = 10' VERT.

STATE OF TEXAS
JOSEPH PERKINS
97522
LICENSED
PROFESSIONAL ENGINEER
3/15/13

Graham Associates, Inc.
CONSULTING ENGINEERS & PLANNERS
600 SIX FLAGS DRIVE, SUITE 500
ARLINGTON, TEXAS 76011 (817) 640-8535
TBPE FIRM: F-1191/TBPLS FIRM: 101538-00

© 2013 Texas Department of Transportation

PLAN/PROFILE

S.H.-121
(SAM RAYBURN TOLLWAY)
AT SOUTH COLONY BLVD

ACCESS ROAD SCB-SBFR
STA. 542+00 TO STA. 549+54.24

SHEET 2 OF 2 SHEETS

FED. RD. DIV. NO.	STATE PROJECT NO.		SHEET NO.
6	(SEE TITLE SHEET)		165
STATE	DIST.	COUNTY	
TEXAS	DAL	DENTON	
CONTROL NO.	SECTION NO.	JOB NO.	HIGHWAY NO.
0364	03	095	S.H.-121

PLOTTED BY: JOE PERKINS
PLOTTED ON: 3/10/2013 12:34 PM
FILE NAME: J:\COLONY\SH-121\CAD\SHEETS\PAVING SHEETS\SCB-SBFR-542+00TO549+96.40.DWG

REV. NO.	C.O. NO.	DESCRIPTION	DATE	BY

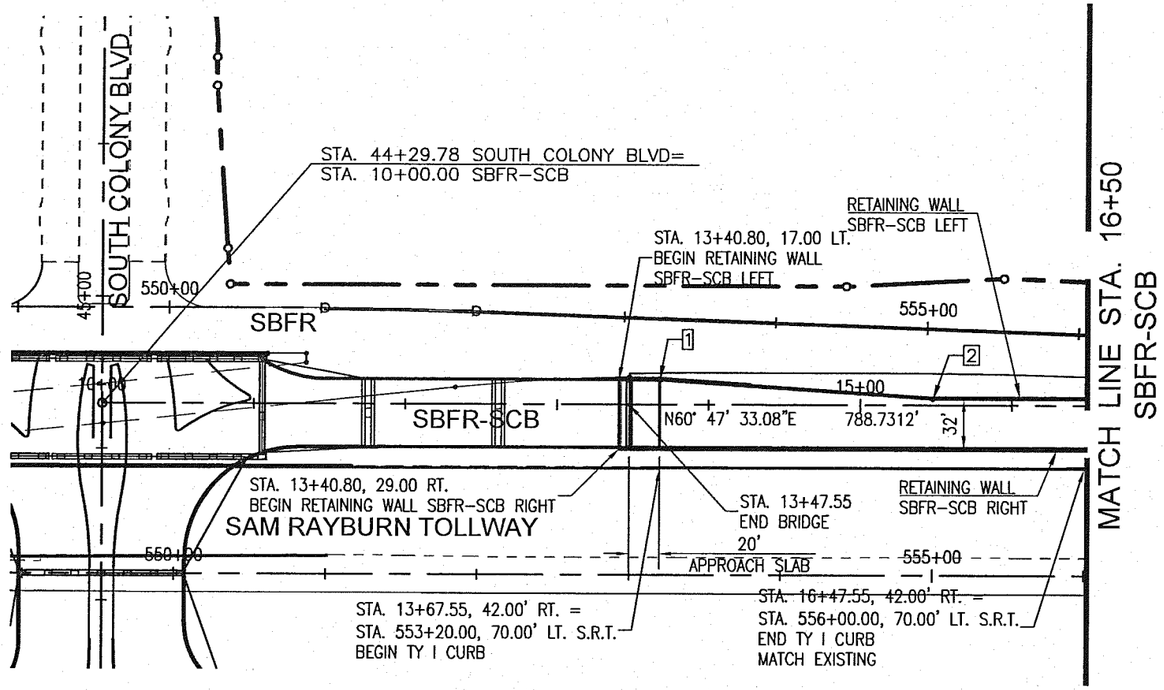

TABLE OF PAVING ELEVATIONS			
POINT #	STATION	OFFSET	ELEV.
1	13+67.55	16.00' LT.	631.36
2	15+47.55	4.00' LT.	624.90

GRAPHIC SCALE 1"=100'

0 100 200

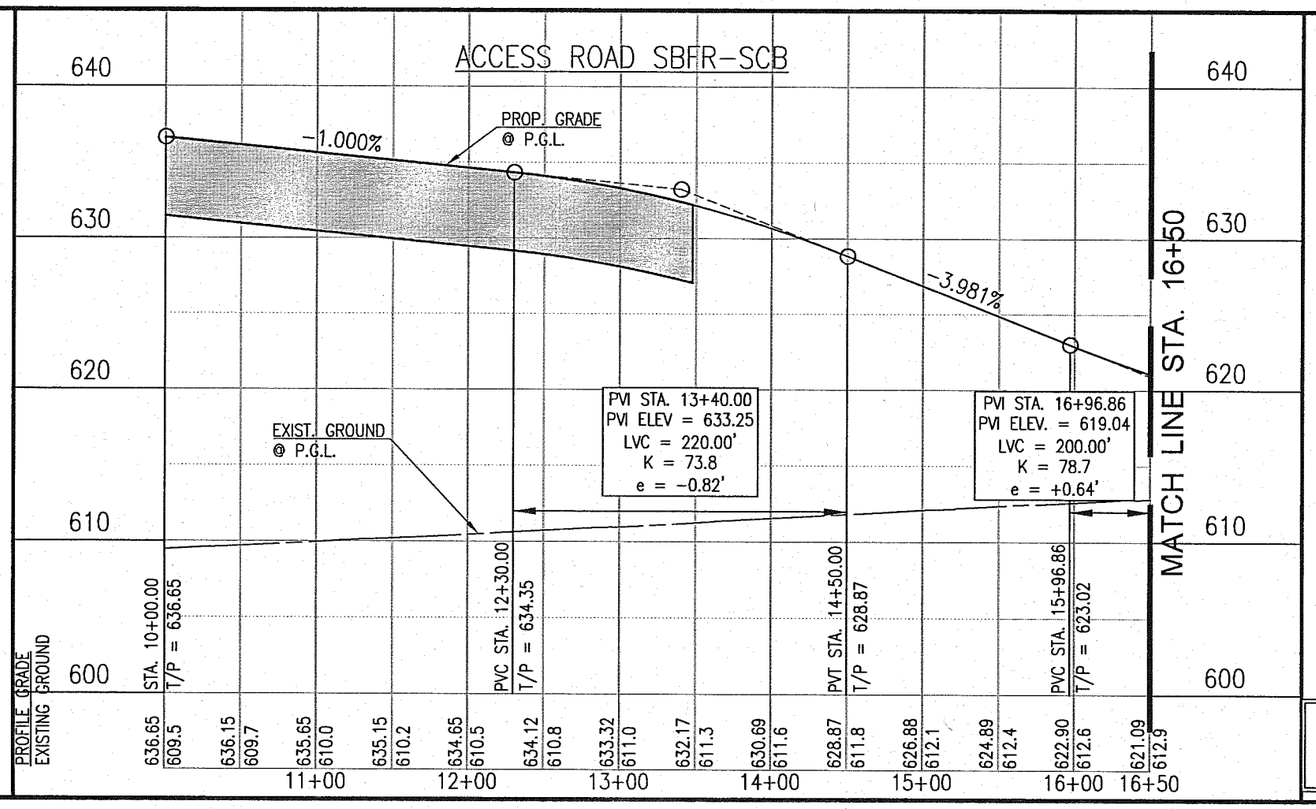

PROFILE SCALE:
1" = 100' HORZ.
1" = 10' VERT.

STATE OF TEXAS
JOSEPH PERKINS
97522
LICENSED
PROFESSIONAL ENGINEER
3/15/13

Graham Associates, Inc.
CONSULTING ENGINEERS & PLANNERS
600 SIX FLAGS DRIVE, SUITE 500
ARLINGTON, TEXAS 76011 (817) 640-8535
TBPE FIRM: F-1191/TBPLS FIRM: 101538-00

© 2013 Texas Department of Transportation

PLAN/PROFILE

S.H.-121
(SAM RAYBURN TOLLWAY)
AT SOUTH COLONY BLVD

ACCESS ROAD SBFR-SCB
STA. 10+00 TO STA. 16+50

SHEET 1 OF 2 SHEETS

FED. RD. DIV. NO.	STATE PROJECT NO.		SHEET NO.
6	(SEE TITLE SHEET)		166
STATE	DIST.	COUNTY	
TEXAS	DAL	DENTON	
CONTROL NO.	SECTION NO.	JOB NO.	HIGHWAY NO.
0364	03	095	S.H.-121

PLOTTED BY: JOE PERKINS
PLOTTED ON: 3/10/2013 12:38 PM
FILE NAME: J:\COLONY\SH-121\CAD\SHEETS\PAVING SHEETS\SBFR-SCB-10+00TO16+50.DWG

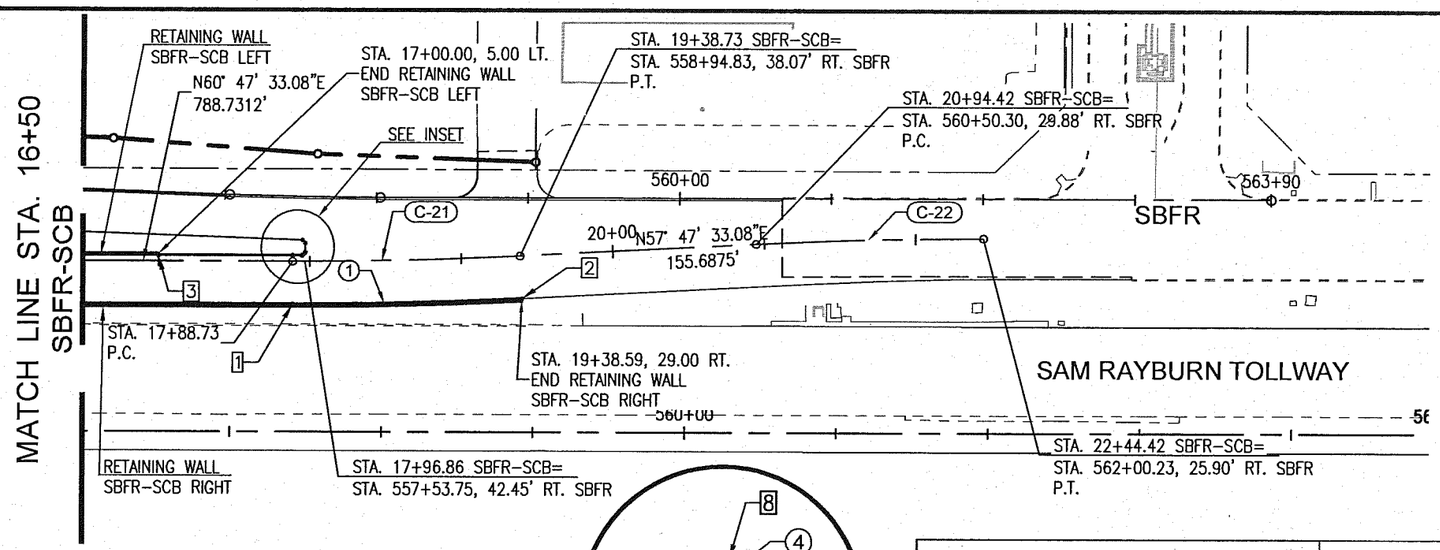

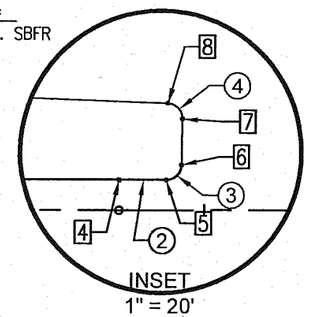

CURVE DATA

Curve #	Δ	D	R	T	L
C-21	3°00'00.00"	2°00'00.00"	2864.7900'	75.0172'	150.0001'
C-22	3°00'00.00"	2°00'00.00"	2864.7900'	75.0172'	150.0001'
1	3°00'00.00"	1°58'50.31"	2892.7892'	75.7504'	151.4661'
2	0°07'29.27"	2°00'10.07"	2860.7903'	3.1156'	6.2311'
3	88°57'22.44"	–	2.0000'	1.9639'	3.1052'
4	88°56'24.24"	–	2.0000'	1.9634'	3.1046'

TABLE OF PAVING ELEVATIONS

POINT #	STATION	OFFSET	ELEV.
1	17+88.73	28.00' RT.	618.30
2	19+38.73	28.00' RT.	616.03
3	17+00.00	4.00' LT.	619.51
4	17+88.73	4.00' LT.	617.64

TABLE OF PAVING ELEVATIONS

POINT #	STATION	OFFSET	ELEV.
5	17+94.97	4.00' LT.	617.55
6	17+96.97	5.96' LT.	617.48
7	17+97.09	12.03' LT.	617.35
8	17+95.16	14.07' LT.	617.33

GRAPHIC SCALE 1"=100'

0 100 200

REV. NO.	C.O. NO.	DESCRIPTION	DATE	BY

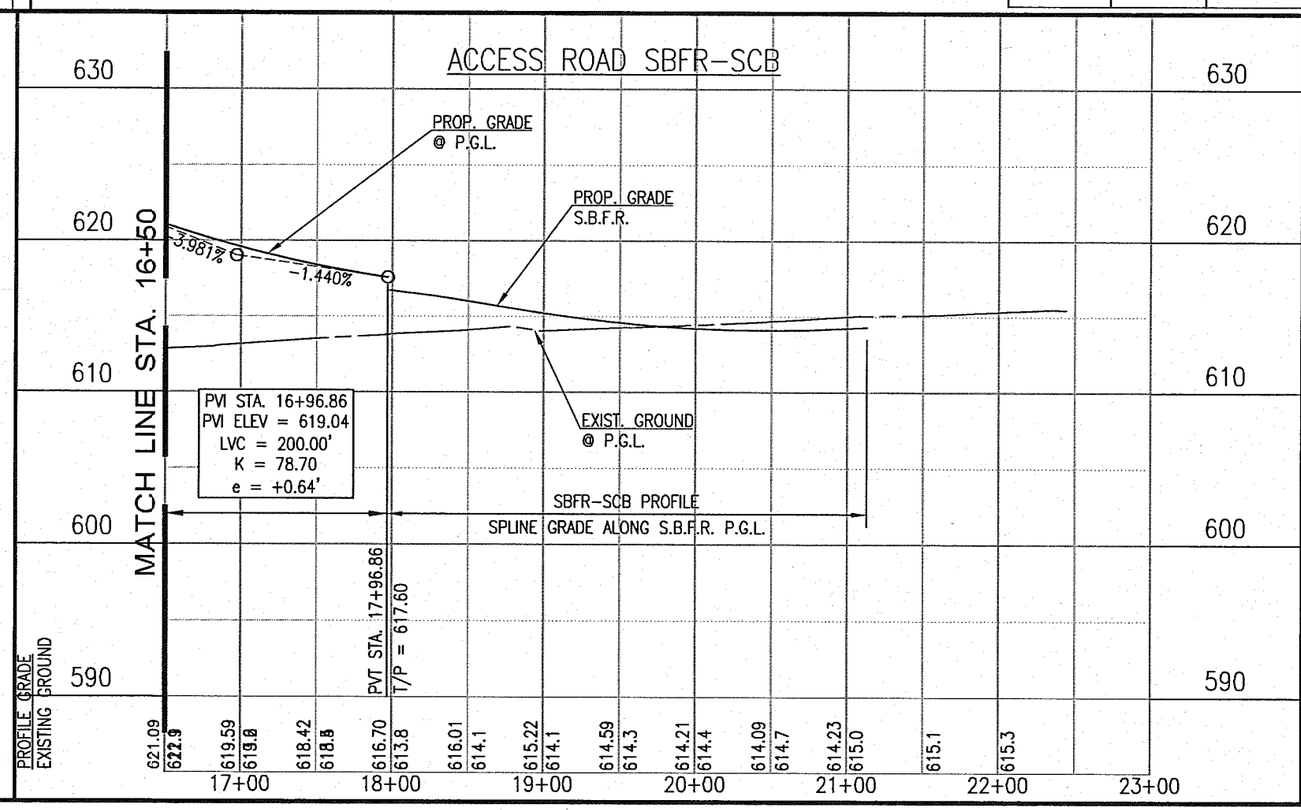

PROFILE SCALE:
1" = 100' HORZ.
1" = 10' VERT.

STATE OF TEXAS
JOSEPH PERKINS
97522
LICENSED PROFESSIONAL ENGINEER
3/15/13

Graham Associates, Inc.
CONSULTING ENGINEERS & PLANNERS
600 SIX FLAGS DRIVE, SUITE 500
ARLINGTON, TEXAS 76011 (817) 640-8535
TBPE FIRM: F-1191/TBPLS FIRM: 101538-00

© 2013 Texas Department of Transportation

PLAN/PROFILE

S.H.-121
(SAM RAYBURN TOLLWAY)
AT SOUTH COLONY BLVD

ACCESS ROAD SBFR-SCB
STA. 16+50 TO STA. 22+44.42

SHEET 2 OF 2 SHEETS

FED. RD. DIV. NO.	STATE PROJECT NO.		SHEET NO.
6	(SEE TITLE SHEET)		167
STATE	DIST.	COUNTY	
TEXAS	DAL	DENTON	
CONTROL NO.	SECTION NO.	JOB NO.	HIGHWAY NO.
0364	03	095	S.H.-121

PLOTTED BY: JOE PERKINS
PLOTTED ON: 3/11/2013 7:30 AM
FILE NAME: J:\COLONY\SH-121\CAD\SHEETS\PAVING SHEETS\SBFR-SCB-16+50TOEND.DWG

REV. NO.	C.O. NO.	DESCRIPTION	DATE	BY

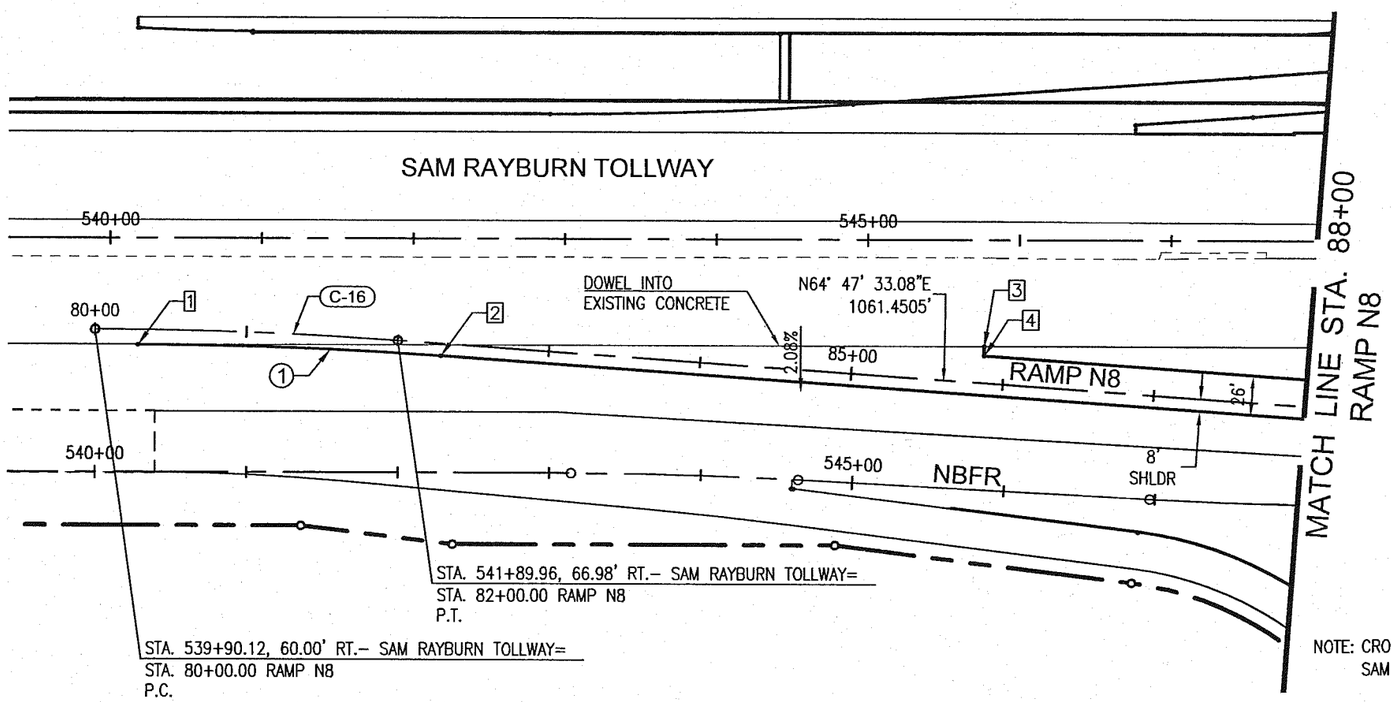

NOTE: CROSS SLOPE FOR RAMP N8 AND SAM RAYBURN TOLLWAY IS 2.08% (USUAL)

GRAPHIC SCALE 1"=100'

0 100 200

CURVE DATA

Curve #	Δ	D	R	T	L
C-16	4°00'00.00"	2°00'00.00"	2864.7900'	100.0407'	200.0001'
1	4°00'00.00"	2°00'00.00"	2864.7900'	100.0407'	200.0001'

TABLE OF PAVING ELEVATIONS

POINT #	STATION	OFFSET	ELEV.
1	80+28.42	9.86' RT.	605.62
2	82+28.95	8.00' RT.	606.40
3	85+86.17	24.19' LT.	607.98
4	85+86.60	18.00' LT.	607.85

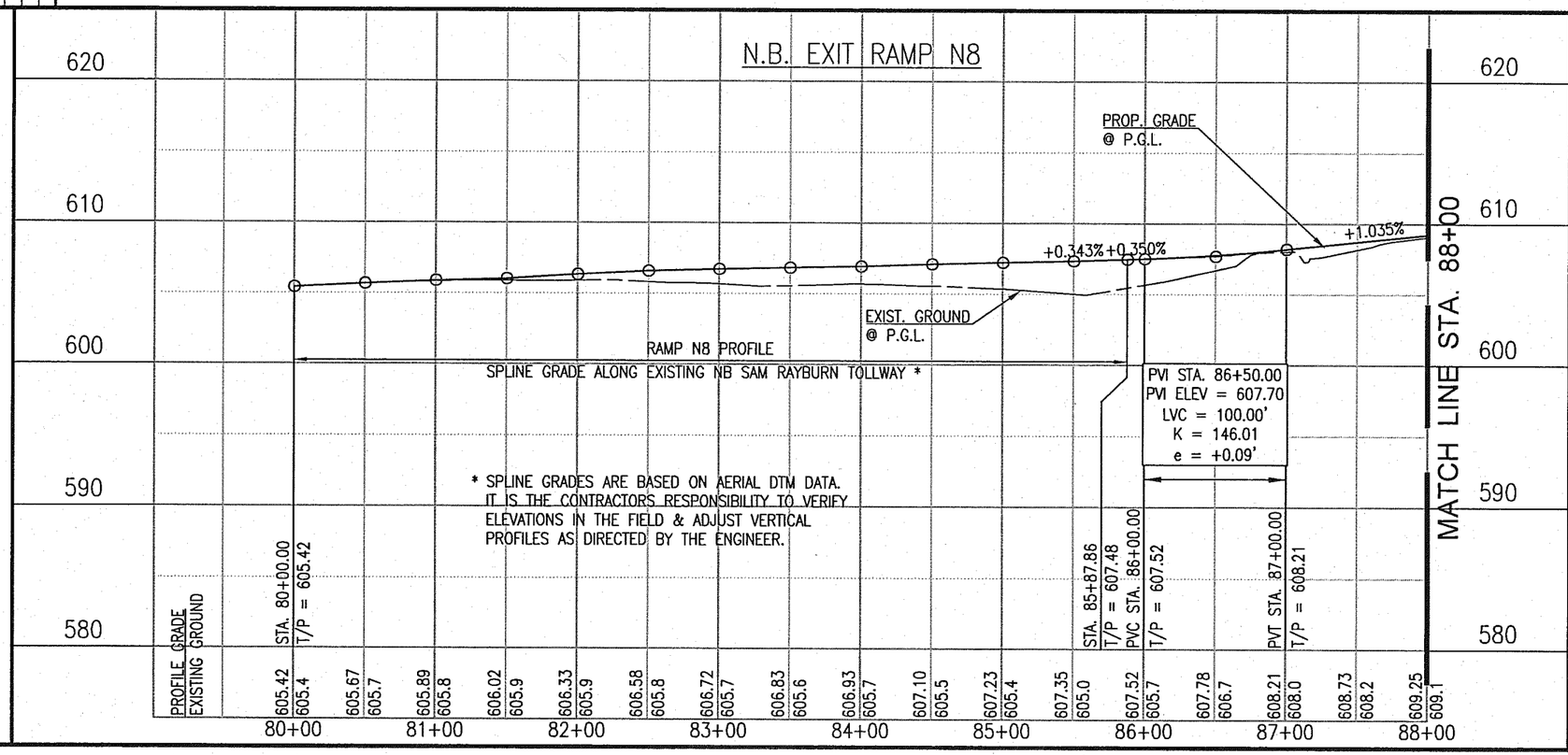

PROFILE SCALE:
1" = 100' HORZ.
1" = 10' VERT.

STATE OF TEXAS
JOSEPH PERKINS
97522
LICENSED PROFESSIONAL ENGINEER
3/15/13

Graham Associates, Inc.
CONSULTING ENGINEERS & PLANNERS
600 SIX FLAGS DRIVE, SUITE 500
ARLINGTON, TEXAS 76011 (817) 640-8535
TBPE FIRM: F-1191/TBPLS FIRM: 101538-00

© 2013 Texas Department of Transportation

PLAN/PROFILE

S.H.-121
(SAM RAYBURN TOLLWAY)
AT SOUTH COLONY BLVD

N.B. EXIT RAMP N8
STA. 80+00 TO STA. 88+00

SHEET 1 OF 2 SHEETS

FED. RD. DIV. NO.	STATE PROJECT NO.		SHEET NO.
6	(SEE TITLE SHEET)		168
STATE	DIST.	COUNTY	
TEXAS	DAL	DENTON	
CONTROL NO.	SECTION NO.	JOB NO.	HIGHWAY NO.
0364	03	095	S.H.-121

PLOTTED BY: JOE PERKINS
PLOTTED ON: 3/10/2013 12:57 PM
FILE NAME: J:\COLONY\SH-121\CAD\SHEETS\PAVING SHEETS\NB-EXIT-00T0068+00.DWG

REV. NO.	C.O. NO.	DESCRIPTION	DATE	BY

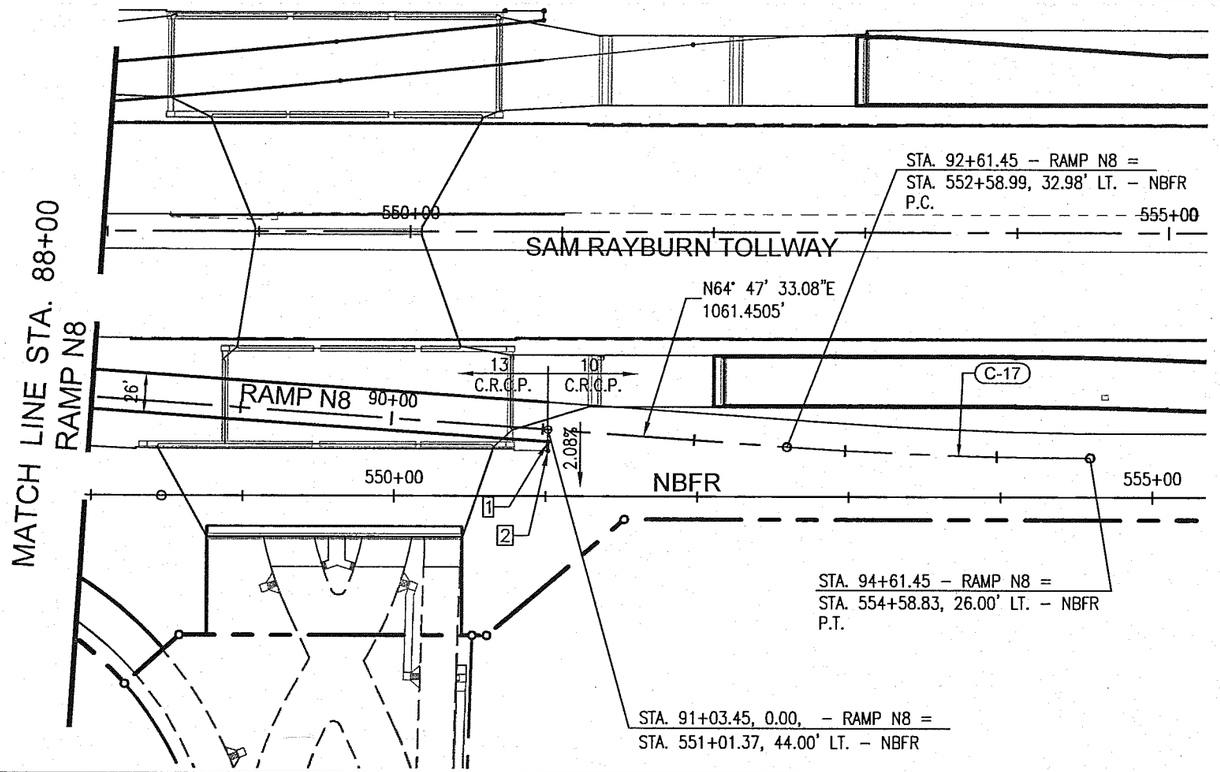

CURVE DATA

Curve #	Δ	D	R	T	L
C-17	4°00'00.00"	2°00'00.00"	2864.7900'	100.0407'	200.0001'

TABLE OF PAVING ELEVATIONS

POINT #	STATION	OFFSET	ELEV.
1	91+04.01	8.00' RT.	609.04
2	91+04.43	13.97' RT.	608.92

NOTE: CROSS SLOPE FOR RAMP N8 AND N.B. FRONTAGE ROAD IS 2.08% (USUAL)

GRAPHIC SCALE 1"=100'

0 100 200

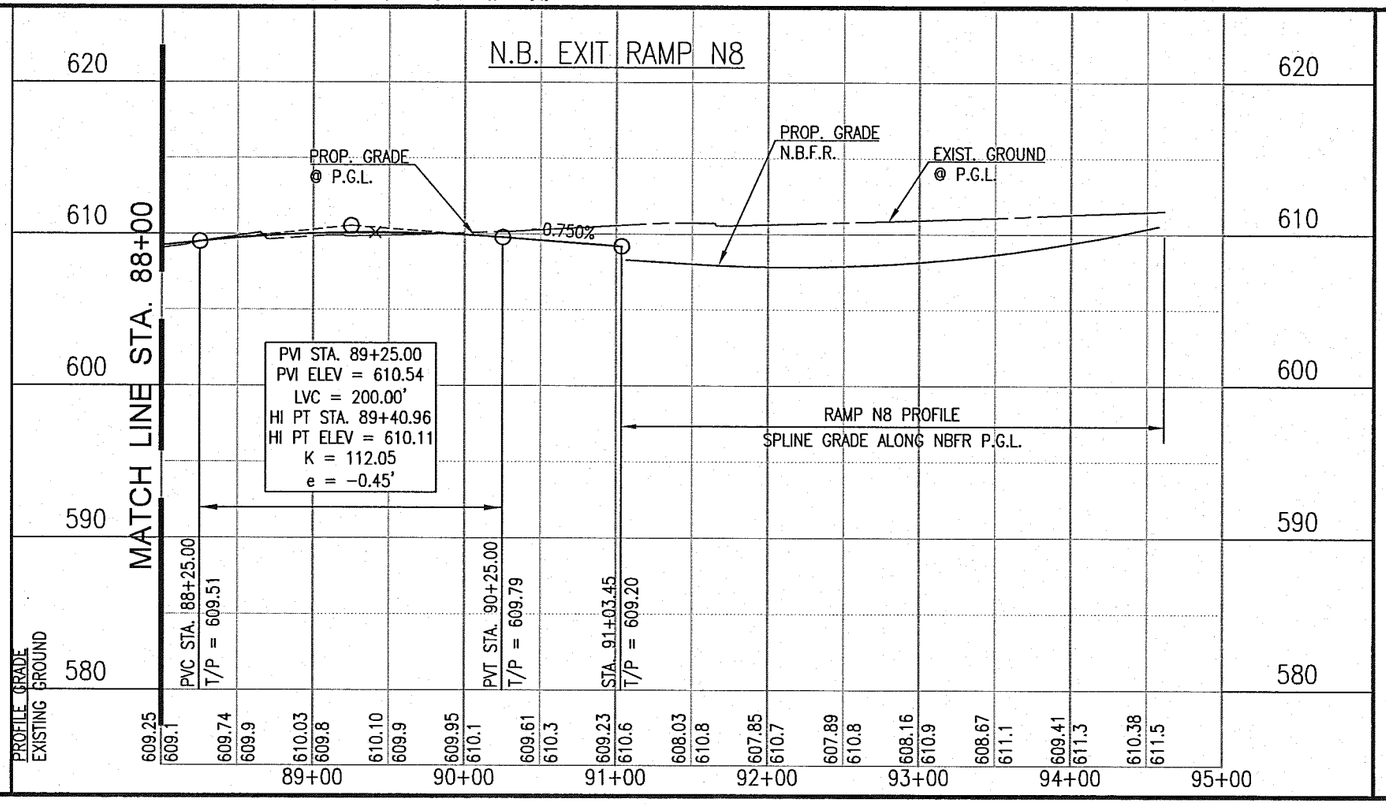

PROFILE SCALE:
1" = 100' HORZ.
1" = 10' VERT.

STATE OF TEXAS
JOSEPH PERKINS
97522
LICENSED PROFESSIONAL ENGINEER
3/15/13

Graham Associates, Inc.
CONSULTING ENGINEERS & PLANNERS
600 SIX FLAGS DRIVE, SUITE 500
ARLINGTON, TEXAS 76011 (817) 640-8535
TBPE FIRM: F-1191/TBPLS FIRM: 101538-00

© 2013 Texas Department of Transportation

PLAN\PROFILE

S.H.-121
(SAM RAYBURN TOLLWAY)
AT SOUTH COLONY BLVD

N.B. EXIT RAMP N8
STA. 88+00 TO STA. 94+61.45

SHEET 2 OF 2 SHEETS

FED. RD. DIV. NO.	STATE PROJECT NO.		SHEET NO.
6	(SEE TITLE SHEET)		169
STATE	DIST.	COUNTY	
TEXAS	DAL	DENTON	
CONTROL NO.	SECTION NO.	JOB NO.	HIGHWAY NO.
0364	03	095	S.H.-121

PLOTTED BY: JOE PERKINS
PLOTTED ON: 3/10/2013 1:01 PM
FILE NAME: J:\COLONY\SH-121\CAD\SHEETS\PAVING SHEETS\N8-88+00TO94+00.DWG

REV. NO.	C.O. NO.	DESCRIPTION	DATE	BY

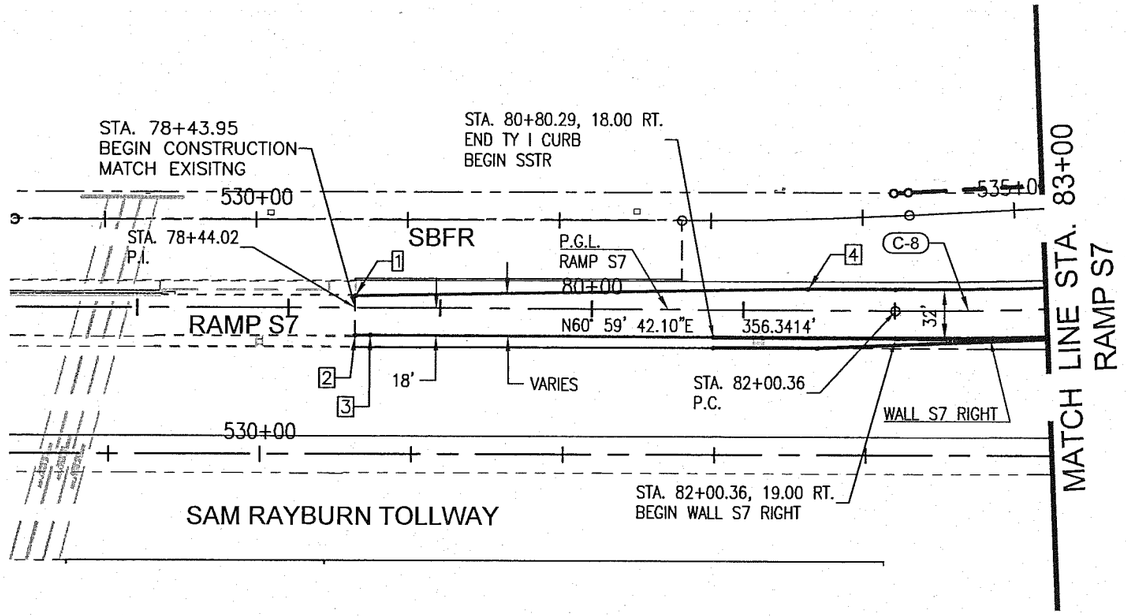

CURVE DATA					
Curve #	Δ	D	R	T	L
C-8	2°29'35.22"	2°00'00.00"	2864.7900'	62.3378'	124.6559'

TABLE OF PAVING ELEVATIONS			
POINT #	STATION	OFFSET	ELEV.
1	78+43.93	7.79' LT.	605.80
2	78+43.95	18.20' RT.	606.36
3	78+54.03	18.00' RT.	606.25
4	81+42.59	14.00' LT.	603.30

NOTE: CROSS SLOPE FOR RAMP S7 AND SAM RAYBURN TOLLWAY IS 2.08% (USUAL)

GRAPHIC SCALE 1"=100'

0 100 200

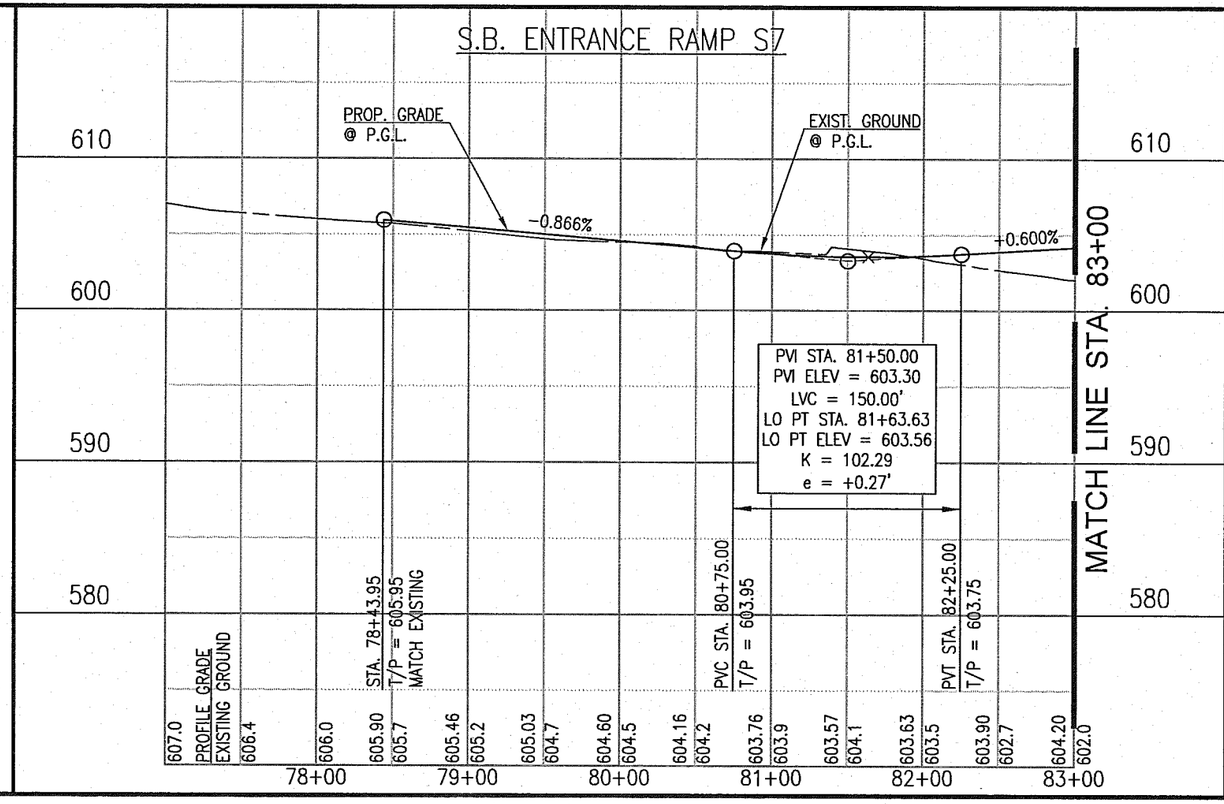

PROFILE SCALE:
1" =100' HORZ.
1" = 10' VERT.

STATE OF TEXAS
JOSEPH PERKINS
97522
LICENSED
PROFESSIONAL ENGINEER
3/13/13

Graham Associates, Inc.
CONSULTING ENGINEERS & PLANNERS
600 SIX FLAGS DRIVE, SUITE 500
ARLINGTON, TEXAS 76011 (817) 640-8535
TBPE FIRM: F-1191/TBPLS FIRM: 101538-00

© 2013 Texas Department of Transportation

PLAN/PROFILE

S.H.-121
(SAM RAYBURN TOLLWAY)
AT SOUTH COLONY BLVD

S.B. ENTRANCE RAMP S7
STA. 78+43.95 TO STA. 83+00

SHEET 1 OF 2 SHEETS

FED. RD. DIV. NO.	STATE PROJECT NO.		SHEET NO.
6	(SEE TITLE SHEET)		170
STATE	DIST.	COUNTY	
TEXAS	DAL	DENTON	
CONTROL NO.	SECTION NO.	JOB NO.	HIGHWAY NO.
0364	03	095	S.H.-121

PLOTTED BY: JOE PERKINS
PLOTTED ON: 3/10/2013 1:06 PM
FILE NAME: J:\COLONY\SH-121\CAD\SHEETS\PAVING SHEETS\S7-78+43.97TO83+00.DWG

REV. NO.	C.O. NO.	DESCRIPTION	DATE	BY

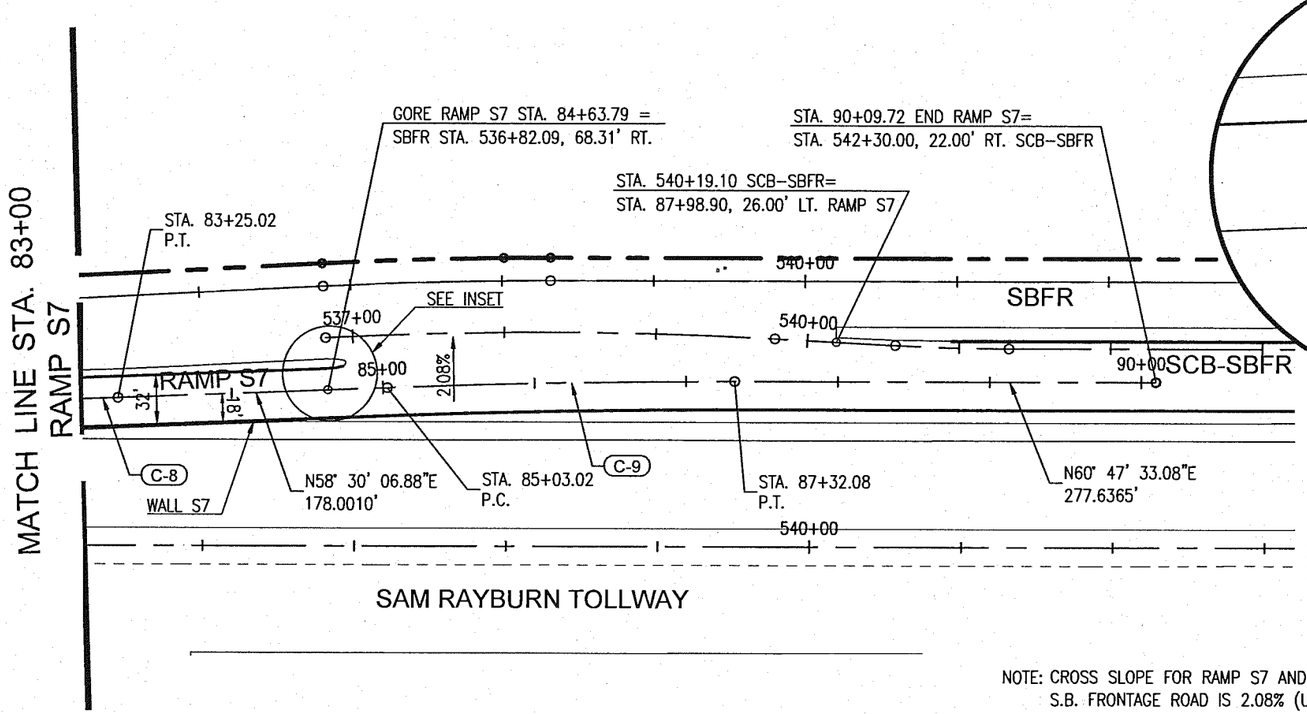

NOTE: CROSS SLOPE FOR RAMP S7 AND S.B. FRONTAGE ROAD IS 2.08% (USUAL)

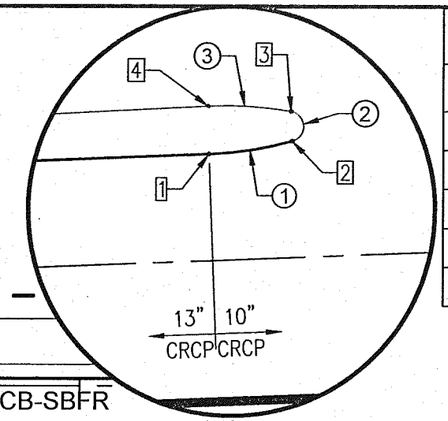

INSET
1" = 20'

CURVE DATA

Curve #	Δ	D	R	T	L
C-8	2°29'35.22"	2°00'00.00"	2864.7900'	62.3378'	124.6559'
C-9	2°17'26.20"	1°00'00.00"	5729.5800'	114.5458'	229.0611'
1	13°20'55.30"	———	48.0000'	5.6169'	11.1830'
2	154°15'06.30"	———	2.0000'	8.7506'	5.3844'
3	13°06'32.20"	———	48.0000'	5.5151'	10.9821'

TABLE OF PAVING ELEVATIONS

POINT #	STATION	OFFSET	ELEV.
1	84+63.39	14.00' LT.	604.89
2	84+74.47	15.30' LT.	604.93
3	84+74.44	19.20' LT.	604.85
4	84+63.54	20.31' LT.	604.76

GRAPHIC SCALE 1"=100'

0 100 200

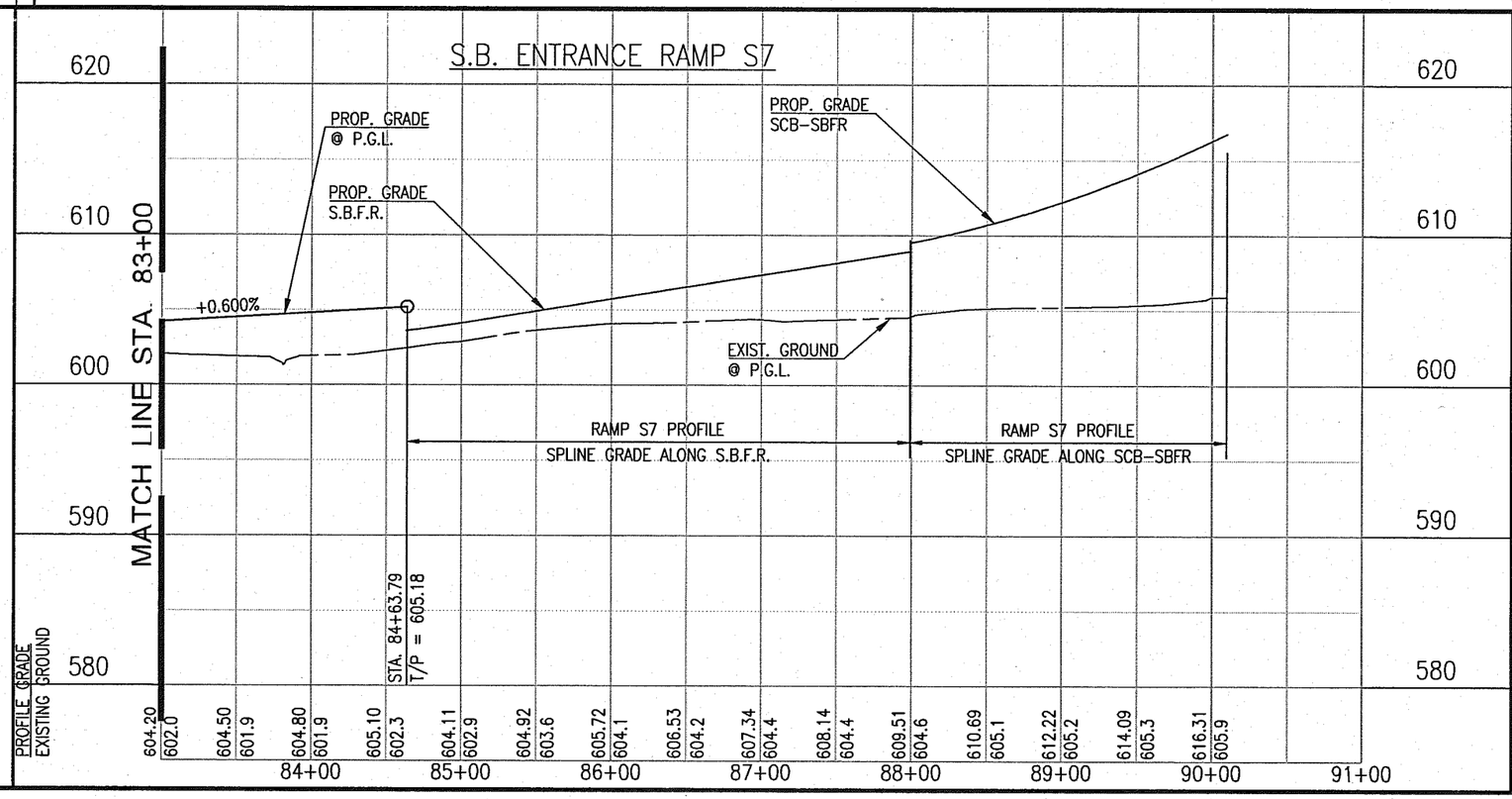

PROFILE SCALE:
1" = 100' HORZ.
1" = 10' VERT.

STATE OF TEXAS
JOSEPH PERKINS
97522
LICENSED
PROFESSIONAL ENGINEER
3/15/13

Graham Associates, Inc.
CONSULTING ENGINEERS & PLANNERS
600 SIX FLAGS DRIVE, SUITE 500
ARLINGTON, TEXAS 76011 (817) 640-8535
TBPE FIRM: F-1191/TBPLS FIRM: 10153B-00

© 2013 Texas Department of Transportation

PLAN/PROFILE

S.H.-121
(SAM RAYBURN TOLLWAY)
AT SOUTH COLONY BLVD

S.B. ENTRANCE RAMP S7
STA. 83+00 TO STA. 90+09.72

SHEET 2 OF 2 SHEETS

FED. RD. DIV. NO.	STATE PROJECT NO.		SHEET NO.
6	(SEE TITLE SHEET)		171
STATE	DIST.	COUNTY	
TEXAS	DAL	DENTON	
CONTROL NO.	SECTION NO.	JOB NO.	HIGHWAY NO.
0364	03	095	S.H.-121

PLOTTED BY: JOE PERKINS
PLOTTED ON: 3/11/2013 8:00 AM
FILE NAME: J:\COLONY\SH-121\CAD\SHEETS\PAVING SHEETS\S7-83+00TOEND.DWG

REV. NO.	C.O. NO.	DESCRIPTION	DATE	BY

NOTE: CROSS SLOPE FOR RAMP S8 ACCELERATION LANE AND SAM RAYBURN TOLLWAY IS 2.08%

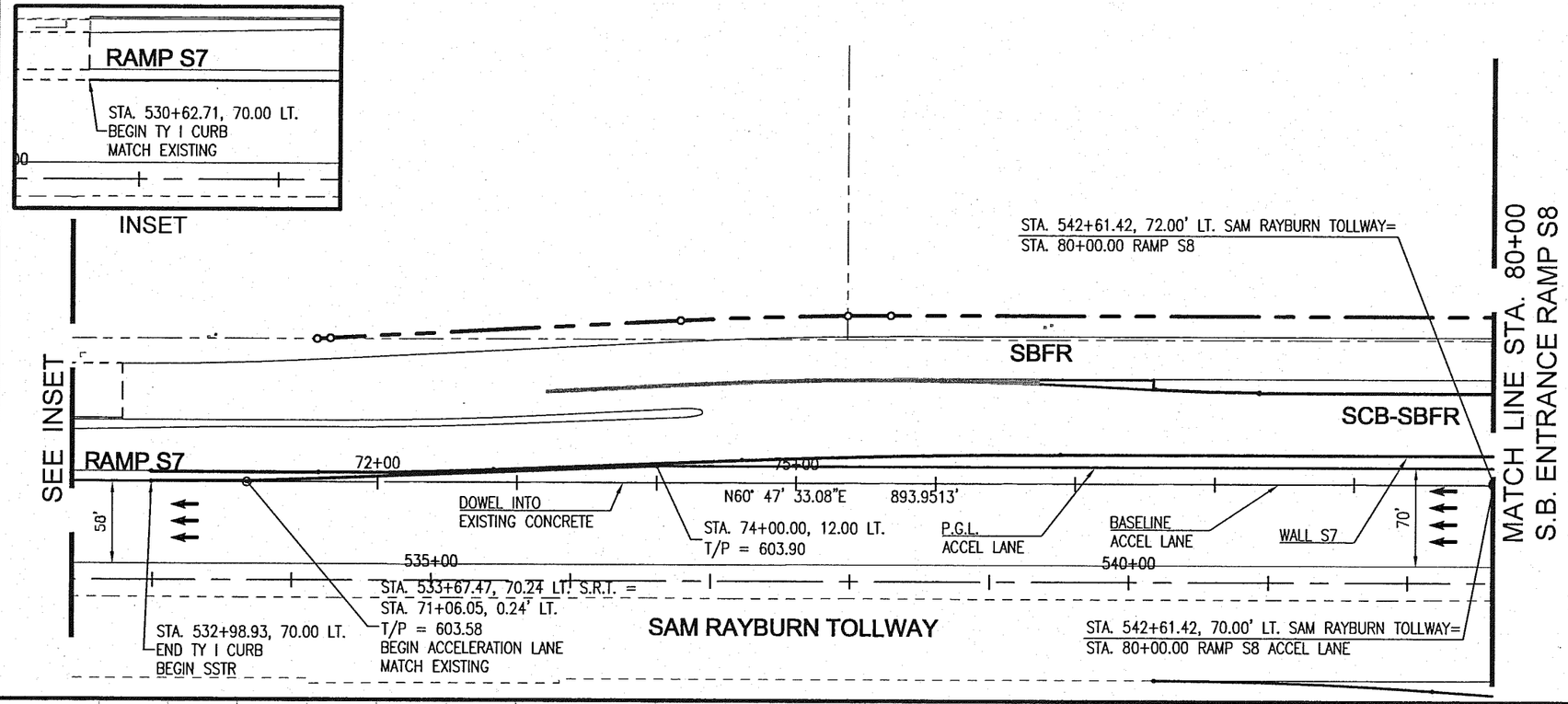

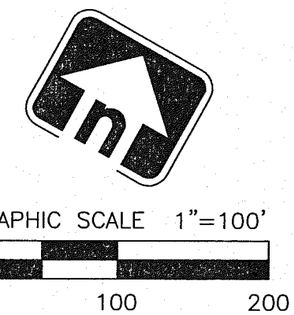

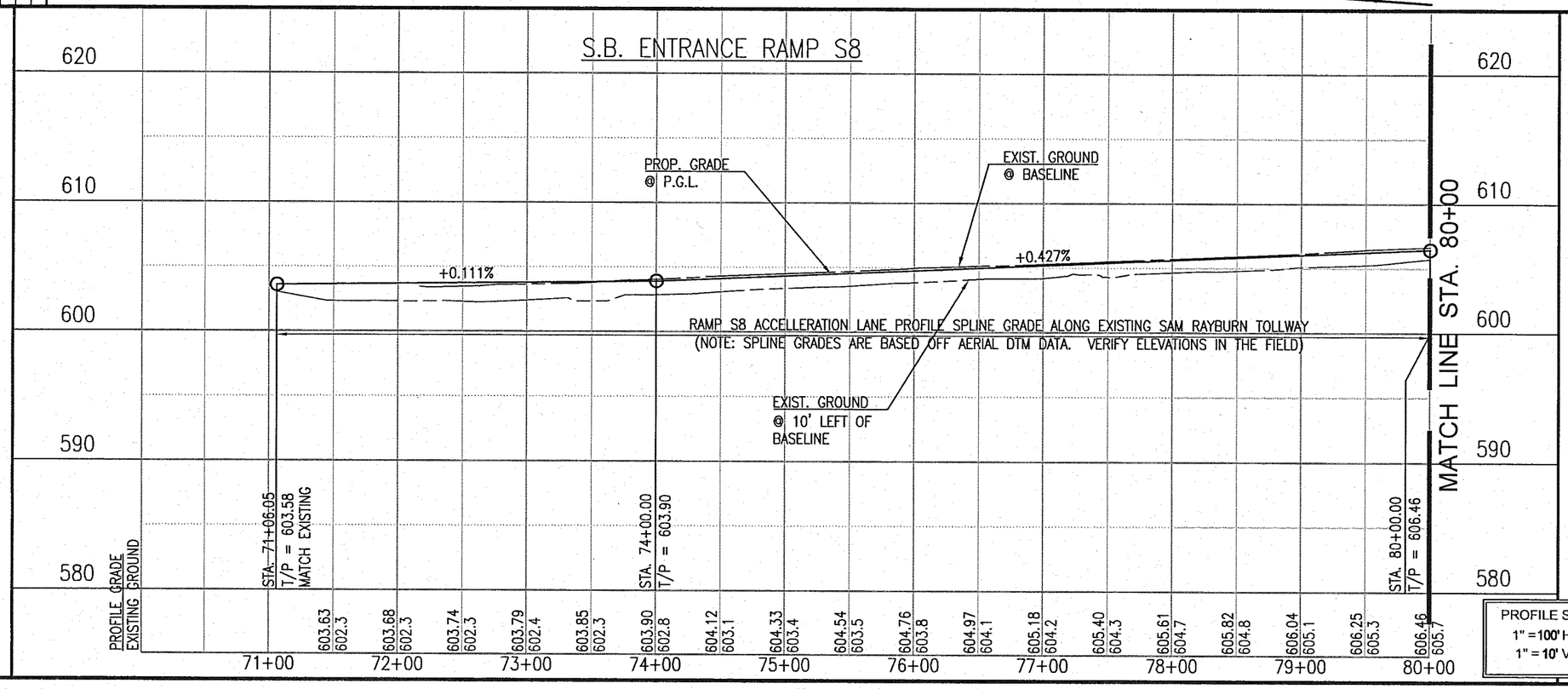

PROFILE SCALE:
1" = 100' HORZ.
1" = 10' VERT.

STATE OF TEXAS
JOSEPH PERKINS
97522
LICENSED
PROFESSIONAL ENGINEER
3/15/13

Graham Associates, Inc.
CONSULTING ENGINEERS & PLANNERS
600 SIX FLAGS DRIVE, SUITE 500
ARLINGTON, TEXAS 76011 (817) 640-8535
TBPE FIRM: F-1191/TBPLS FIRM: 101538-00

© 2013 Texas Department of Transportation

PLAN/PROFILE

S.H.-121
(SAM RAYBURN TOLLWAY)
AT SOUTH COLONY BLVD.

S.B. ENTRANCE RAMP S8
ACCELERATION LANE

SHEET 1 OF 3 SHEETS

FED. RD. DIV. NO.	STATE PROJECT NO.			SHEET NO.
6	(SEE TITLE SHEET)			172
STATE	DIST.	COUNTY		
TEXAS	DAL	DENTON		
CONTROL NO.	SECTION NO.	JOB NO.	HIGHWAY NO.	
0364	03	095	S.H.-121	

PLOTTED BY: JOE PERKINS
PLOTTED ON: 3/10/2013 1:31 PM
FILE NAME: J:\COLONY\SH-121\CAD\SHEETS\PAVING SHEETS\S8 ACCEL LANE.DWG
SHEET SIZE: 11" X 17" 1" = 1"

REV. NO.	C.O. NO.	DESCRIPTION	DATE	BY

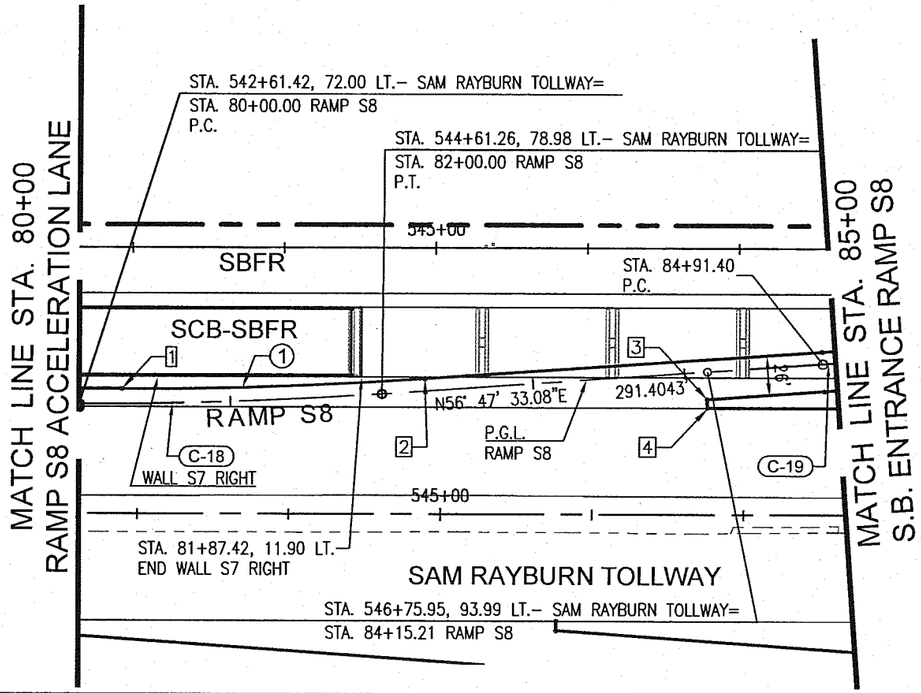

TABLE OF PAVING ELEVATIONS

POINT #	STATION	OFFSET	ELEV.
1	80+28.42	9.86' LT.	606.56
2	82+28.95	8.00' LT.	607.10
3	84+13.95	18.00' RT.	608.33
4	84+13.53	23.93' RT.	608.45

CURVE DATA

Curve #	Δ	D	R	T	L
C-18	4°00'00.00"	2°00'00.00"	2864.7900'	100.0407'	200.0001'
C-19	2°00'00.00"	1°00'00.00"	5729.5800'	100.0102'	200.0001'
1	4°00'00.00"	2°00'00.00"	2864.7900'	100.0407'	200.0001'

NOTE: CROSS SLOPE FOR RAMP S8 AND SAM RAYBURN TOLLWAY IS 2.08% (USUAL)

GRAPHIC SCALE 1"=100'

0 100 200

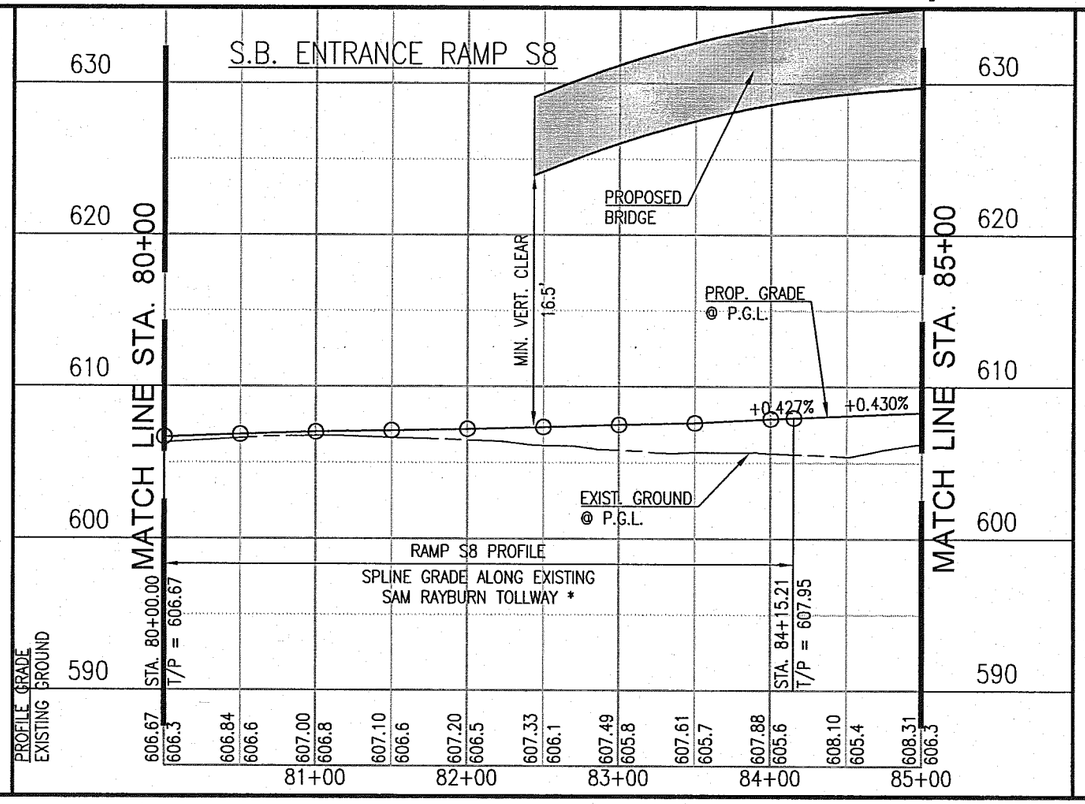

*NOTE: SPLINE GRADES ARE BASED ON AERIAL DTM DATA. IT IS THE CONTRACTORS RESPONSIBILITY TO VERIFY ELEVATIONS IN THE FIELD & ADJUST VERTICAL PROFILES AS DIRECTED BY THE ENGINEER.

PROFILE SCALE:
1" = 100' HORZ.
1" = 10' VERT.

STATE OF TEXAS
JOSEPH PERKINS
97522
LICENSED
PROFESSIONAL ENGINEER
3/15/13

Graham Associates, Inc.
CONSULTING ENGINEERS & PLANNERS
600 SIX FLAGS DRIVE, SUITE 500
ARLINGTON, TEXAS 76011 (817) 640-8535
TBPE FIRM: F-1191/TBPLS FIRM: 101538-00

© 2013 Texas Department of Transportation

PLAN/PROFILE

S.H.-121
(SAM RAYBURN TOLLWAY)
AT SOUTH COLONY BLVD

S.B. ENTRANCE RAMP S8
STA. 80+00 TO STA. 85+00

SHEET 2 OF 3 SHEETS

FED. RD. DIV. NO.	STATE PROJECT NO.		SHEET NO.
6	(SEE TITLE SHEET)		173
STATE	DIST.	COUNTY	
TEXAS	DAL	DENTON	
CONTROL NO.	SECTION NO.	JOB NO.	HIGHWAY NO.
0364	03	095	S.H.-121

PLOTTED BY: JOE PERKINS
PLOTTED ON: 3/19/2013 1:34 PM
FILE NAME: J:\COLORADO\SH-121\CAD\SHEETS\PAVING SHEETS\SB-80+00TO85+00.DWG

REV. NO.	C.O. NO.	DESCRIPTION	DATE	BY

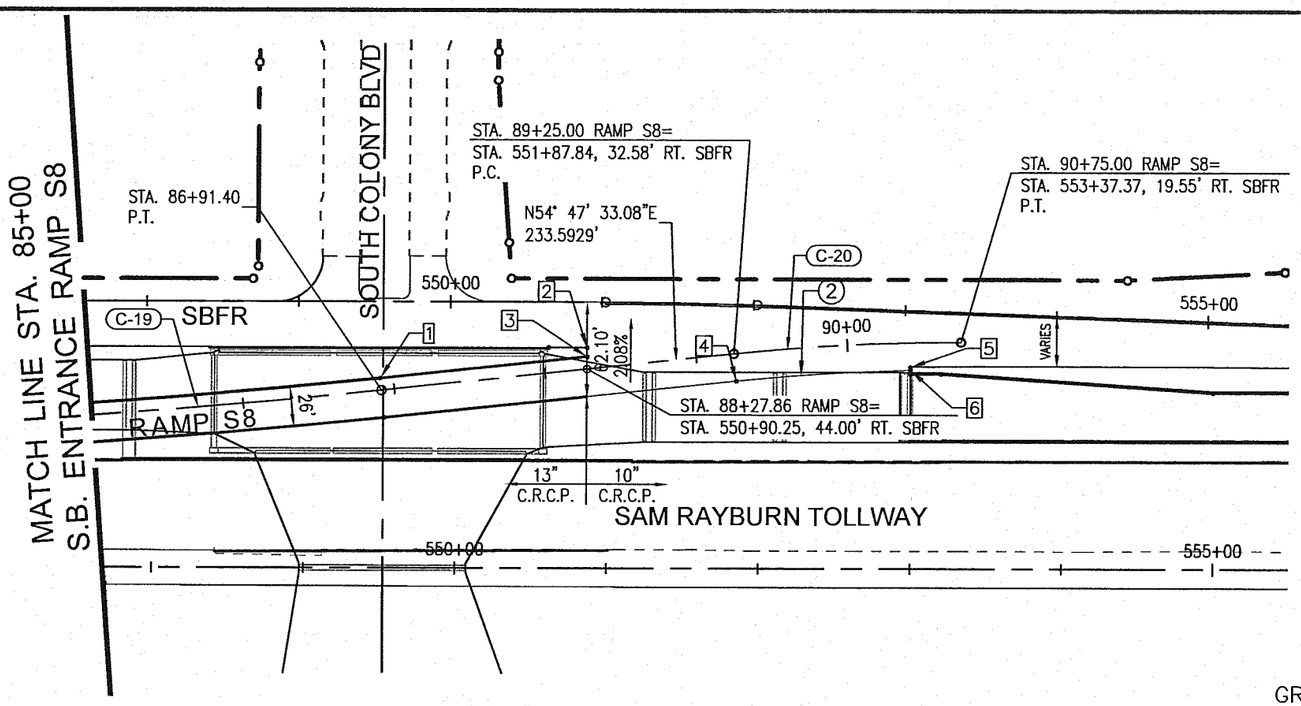

CURVE DATA

Curve #	Δ	D	R	T	L
C-19	2°00'00.00"	1°00'00.00"	5729.5800'	100.0102'	200.0001'
C-20	6°00'00.00"	4°00'00.00"	1432.3945'	75.0686'	150.0000'
2	4°39'21.12"	4°03'03.27"	1414.3943'	57.4986'	114.9340'

TABLE OF PAVING ELEVATIONS

POINT #	STATION	OFFSET	ELEV.
1	86+91.40	8.00' LT.	608.08
2	88+29.33	13.92' LT.	607.86
3	88+28.70	8.00' LT.	607.99
4	89+25.00	18.00' RT.	609.20
5	90+41.40	16.00' RT.	611.24
6	90+41.40	18.00' RT.	611.28

NOTE: CROSS SLOPE FOR RAMP S8 AND S.B. FRONTAGE ROAD IS 2.08% (USUAL)

GRAPHIC SCALE 1"=100'

0 100 200

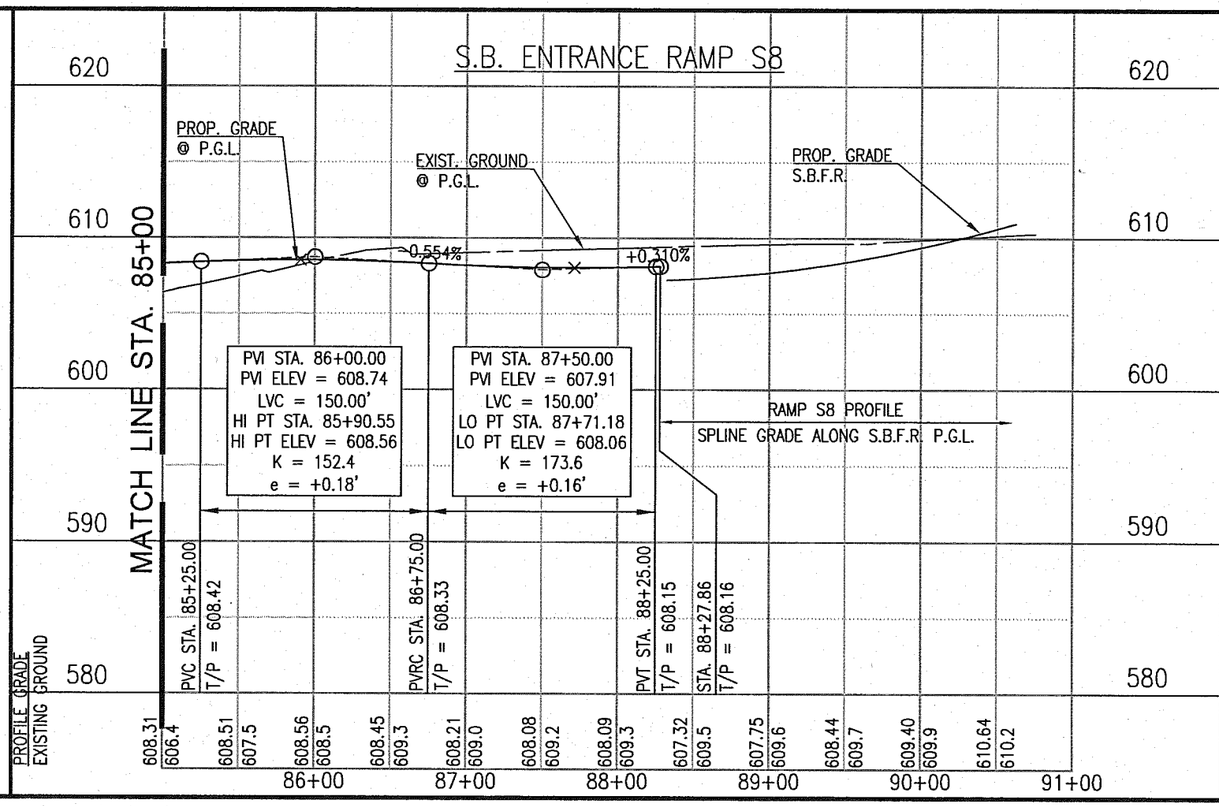

PROFILE SCALE:
1" = 100' HORZ.
1" = 10' VERT.

STATE OF TEXAS
JOSEPH PERKINS
97522
LICENSED
PROFESSIONAL ENGINEER
3/5/13

Graham Associates, Inc.
CONSULTING ENGINEERS & PLANNERS
600 SIX FLAGS DRIVE, SUITE 500
ARLINGTON, TEXAS 76011 (817) 640-8535
TBPE FIRM: F-1191/TBPLS FIRM: 10153B-00

© 2013 Texas Department of Transportation

PLAN/PROFILE

S.H.-121
(SAM RAYBURN TOLLWAY)
AT SOUTH COLONY BLVD

S.B. ENTRANCE RAMP S8
STA. 85+00 TO STA. 90+75

SHEET 3 OF 3 SHEETS

F.E.D. RD. DIV. NO.	STATE PROJECT NO.		SHEET NO.
6	(SEE TITLE SHEET)		174
STATE	DIST.	COUNTY	
TEXAS	DAL	DENTON	
CONTROL NO.	SECTION NO.	JOB NO.	HIGHWAY NO.
0364	03	095	S.H.-121

PLOTTED BY: JOE PERKINS
PLOTTED ON: 3/10/2013 1:39 PM
FILE NAME: J:\COLONY\SH-121\CAD\SHEETS\PAVING SHEETS\S8-85+00TO90+27.86.DWG

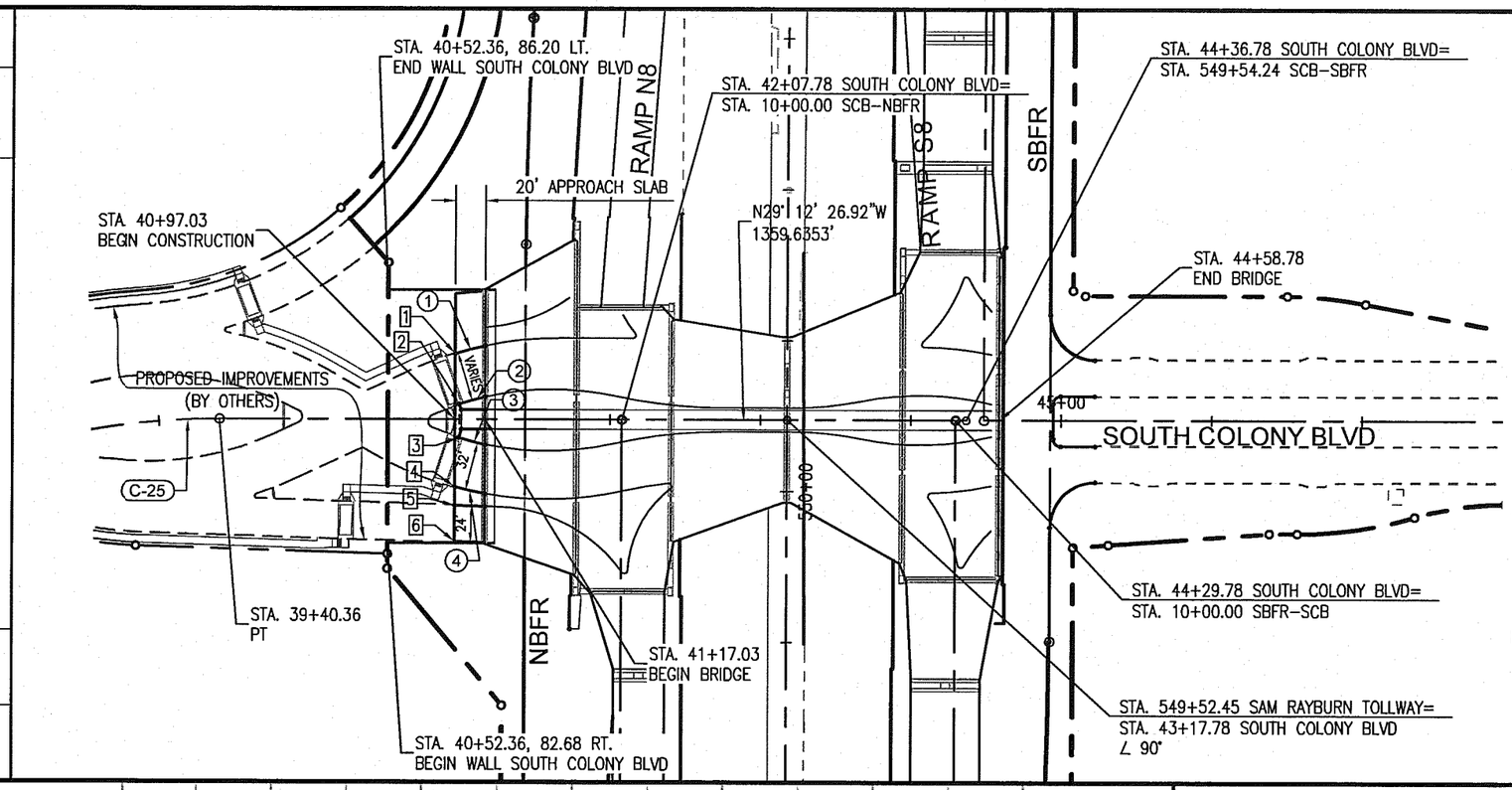

CURVE TABLE

CURVE #	Δ	RADIUS	TANGENT	LENGTH
1	5° 06' 30"	232.00'	10.35'	20.68'
2	5° 06' 49"	200.00'	8.93'	17.85'
3	5° 12' 42"	200.00'	9.10'	18.19'
4	5° 03' 55"	232.00'	10.26'	20.51'
C-25	126° 31' 39"	500.00'	992.58'	1104.16'

TABLE OF PAVING ELEVATIONS

POINT #	STATION	OFFSET	ELEV.
1	40+97.03	43.55' LT.	633.64
2	40+99.83	10.25' LT.	634.02
3	40+99.42	12.11' RT.	634.00
4	40+97.03	44.73' RT.	633.63
5	40+97.03	57.08' RT.	633.51
6	40+97.06	81.09' RT.	633.26

NOTES: 1. ALL DIMENSIONS ARE TO FACE OF CURB UNLESS OTHERWISE INDICATED.
2. SEE BRIDGE LAYOUT SHEETS FOR ADDITIONAL INFORMATION.

GRAPHIC SCALE 1"=100'

0 100 200

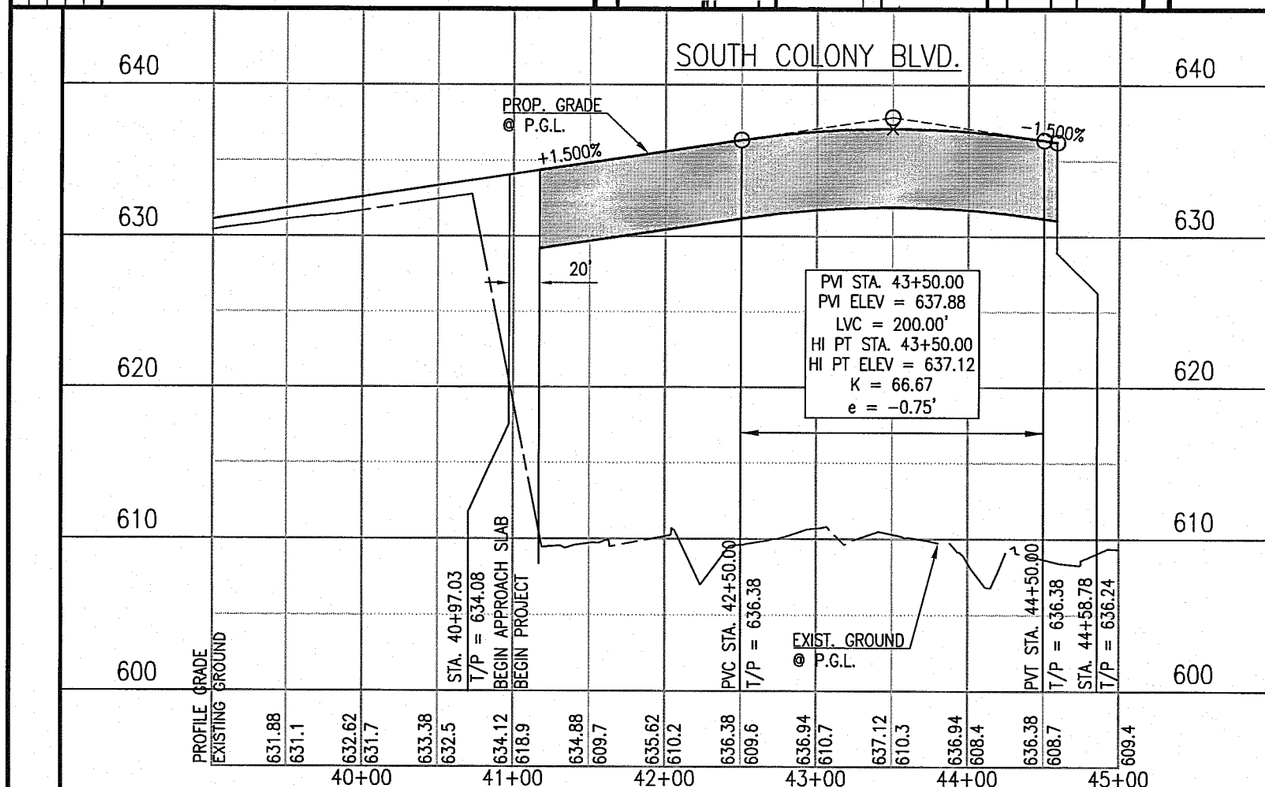

STATE OF TEXAS
JOSEPH PERKINS
97522
LICENSED PROFESSIONAL ENGINEER
4/30/13

Graham Associates, Inc.
CONSULTING ENGINEERS & PLANNERS
600 SIX FLAGS DRIVE, SUITE 500
ARLINGTON, TEXAS 76011 (817) 640-8535
TBPE FIRM: F-1191/TBPLS FIRM: 101538-00

© 2013 Texas Department of Transportation

PLAN/PROFILE

S.H.-121
(SAM RAYBURN TOLWAY)
AT SOUTH COLONY BLVD.

SOUTH COLONY BLVD.
STA. 39+00 TO STA. 44+58.78

SHEET 1 OF 1 SHEETS

FED. RD. DIV. NO.	STATE PROJECT NO.		SHEET NO.
6	(SEE TITLE SHEET)		176
STATE	DIST.	COUNTY	
TEXAS	DAL	DENTON	
CONTROL NO.	SECTION NO.	JOB NO.	HIGHWAY NO.
0364	03	095	S.H.-121

REV. NO.	C.O. NO.	DESCRIPTION	DATE	BY

PLOTTED BY: JOE PERKINS
PLOTTED ON: 4/28/2013 12:12 PM
FILE NAME: J:\COLONY\SH-121\CAD\SHEETS\PAVING SHEETS\COLONY-39+00TO44+58.78.DWG

REV. NO.	C.O. NO.	DESCRIPTION	DATE	BY

POINT	T/P ELEVATION
A	607.59
B	607.61
C	607.59
D	607.54
E	607.49

POINTS A–E ARE EQUAL DISTANCES OF 11.69' APART

POINT	T/P ELEVATION
F	607.66
G	607.55
H	607.43
I	607.32
J	607.20

POINTS F–J ARE EQUAL DISTANCES OF 11.76' APART

CURVE DATA

Curve #	Δ	D	R	T	L
C-6	2°00'00.00"	2°00'00.00"	2864.7900'	50.0051'	100.0000'
①	–	89°17'44"	30.00'	29.63'	46.76'
②	–	89°51'46"	30.00'	29.93'	47.05'

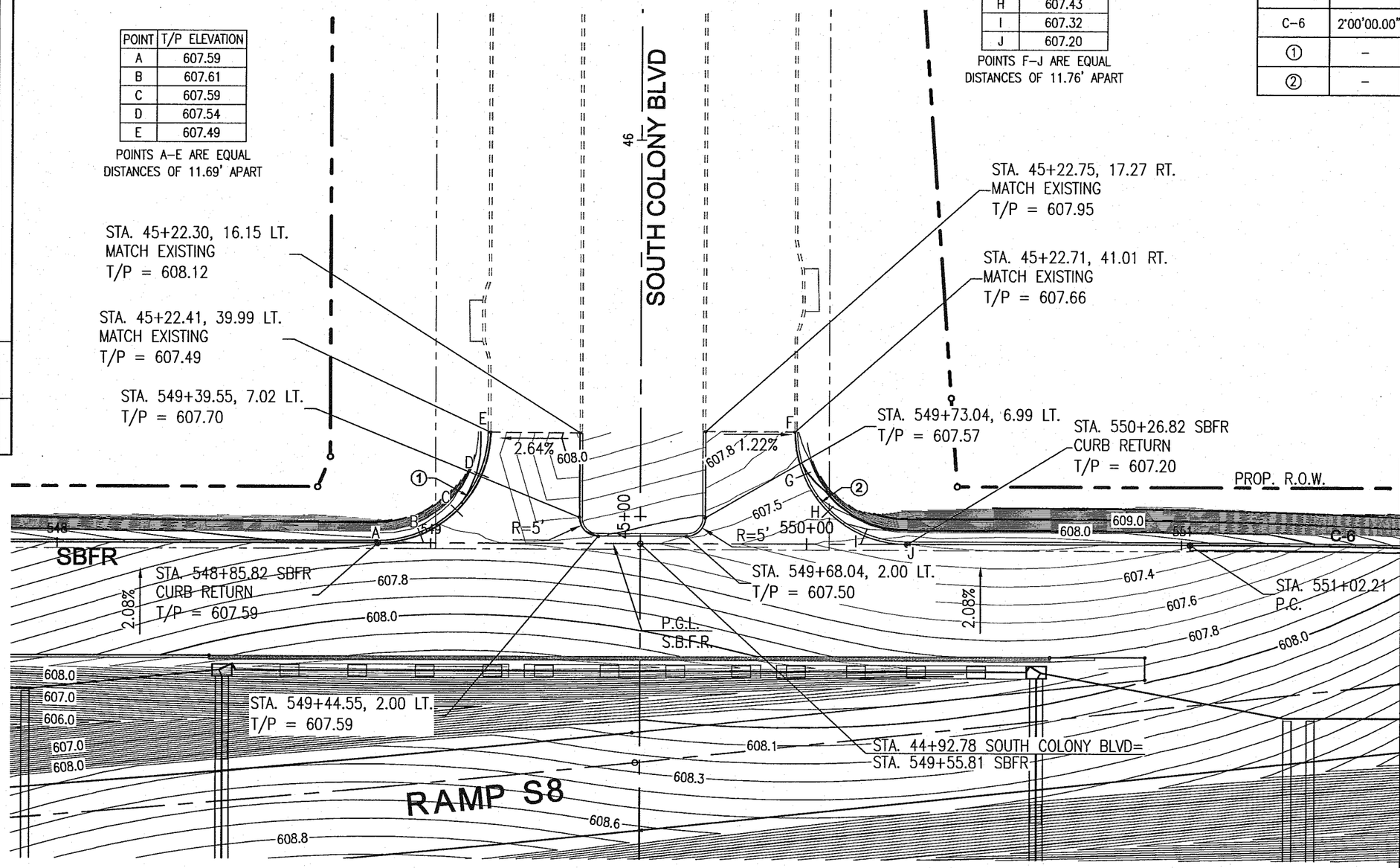

GRAPHIC SCALE 1"=30'

0 30 60

STATE OF TEXAS
JOSEPH PERKINS
97522
LICENSED
PROFESSIONAL ENGINEER
3/15/13

Graham Associates, Inc.
CONSULTING ENGINEERS & PLANNERS
600 SIX FLAGS DRIVE, SUITE 500
ARLINGTON, TEXAS 76011 (817) 640-8535
TBPE FIRM: F-1191/TBPLS FIRM: 101538-00

© 2013 Texas Department of Transportation

INTERSECTION LAYOUT

S.H. - 121
(SAM RAYBURN TOLLWAY)
AT SOUTH COLONY BLVD.

S.B. FRONTAGE ROAD AT
SOUTH COLONY BLVD.

SHEET 1 OF 1 SHEETS

FED. RD. DIV. NO.	STATE PROJECT NO.		SHEET NO.
6	(SEE TITLE SHEET)		177
STATE	DIST.	COUNTY	
TEXAS	DAL	DENTON	
CONTROL NO.	SECTION NO.	JOB NO.	HIGHWAY NO.
0364	03	095	S.H.-121

PLOTTED BY: JOE PERKINS
PLOTTED ON: 3/10/2013 10:45 AM
FILE NAME: J:\COLONY\SH-121\CAD\SHEETS\PAVING SHEETS\INTERSECTION LAYOUT.DWG
SHEET SIZE: 11" X 17" 1" = 1"

REV. NO.	C.O. NO.	DESCRIPTION	DATE	BY

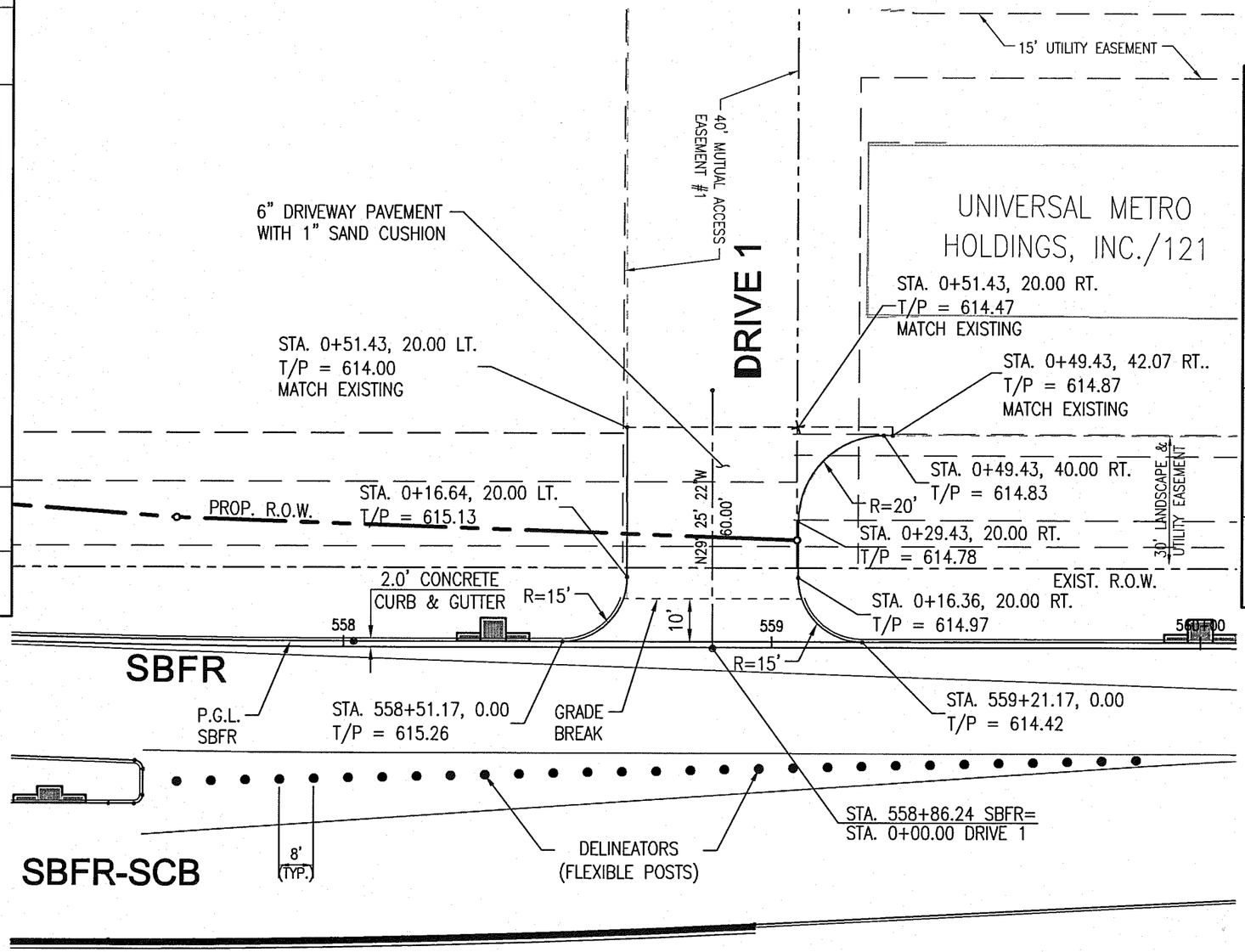

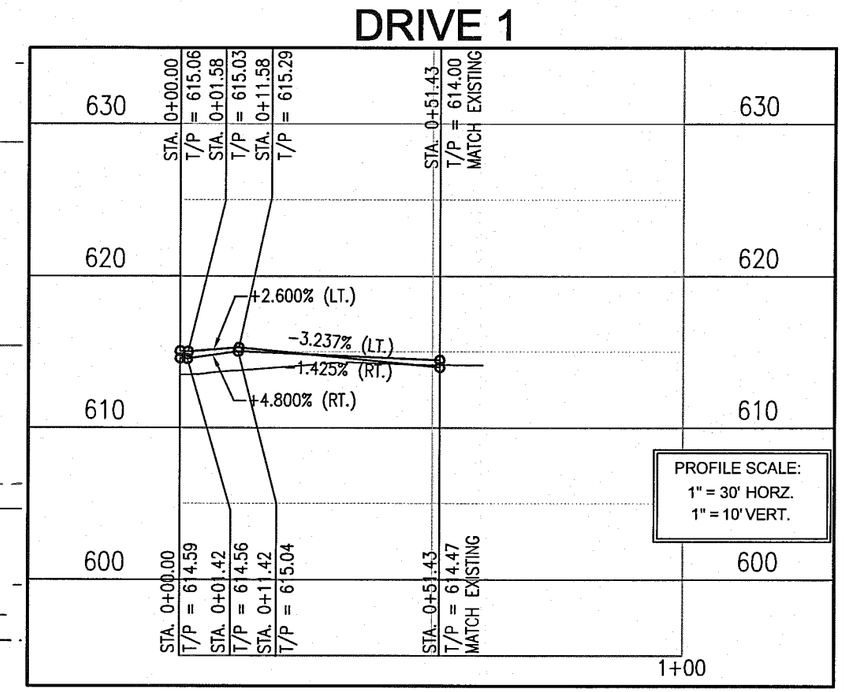

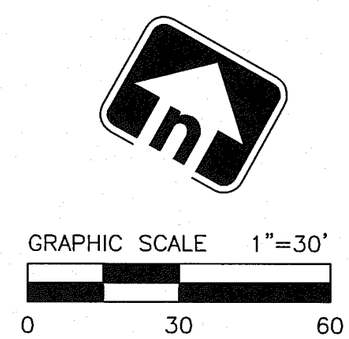

STATE OF TEXAS
JOSEPH PERKINS
97522
LICENSED
PROFESSIONAL ENGINEER
4/30/13

Graham Associates, Inc.
CONSULTING ENGINEERS & PLANNERS
800 SIX FLAGS DRIVE, SUITE 500
ARLINGTON, TEXAS 76011 (817) 640-8535
TBPE FIRM: F-1191/TBPLS FIRM: 101538-00

© 2013 Texas Department of Transportation

DRIVEWAY LAYOUT

S.H. - 121
(SAM RAYBURN TOLLWAY)
AT SOUTH COLONY BLVD.

UNIVERSAL METRO HOLDINGS, INC./121

SHEET 1 OF 1 SHEETS

FED. RD. DIV. NO.	STATE PROJECT NO.		SHEET NO.
6	(SEE TITLE SHEET)		178
STATE	DIST.	COUNTY	
TEXAS	DAL	DENTON	
CONTROL NO.	SECTION NO.	JOB NO.	HIGHWAY NO.
0364	03	095	S.H.-121

PLOTTED BY: JOE PERKINS
PLOTTED ON: 4/27/2013 10:17 AM
FILE NAME: J:\COLONY\SH-121\CAD\SHEETS\PAVING SHEETS\DRIVEWAY LAYOUT.DWG
SHEET SIZE: 11" X 17" 1" = 1"

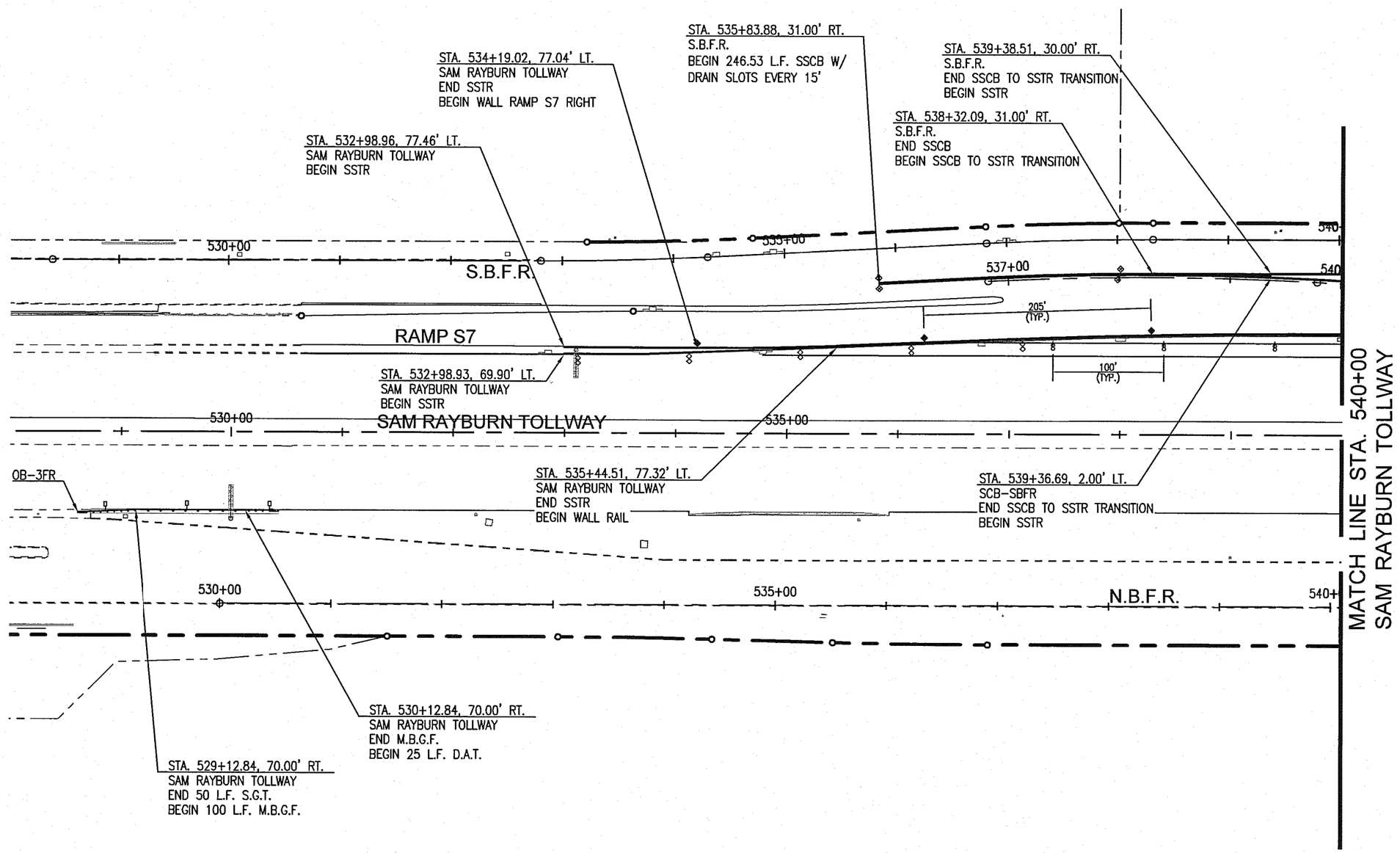

LEGEND

	D-DW SZ 1 (FLX) GND
	D-DW SZ 1 (TYC) CTB (BI)
	D-SW SZ 1 (TYC) CTB
	D-SW SZ 1 (TYC) CTB (BR)
	D-SY SZ 1 (TYC) CTB
	D-SW SZ 1 (FLX) GF2
S.G.T.	SINGLE GUARDRAIL TERMINAL
D.A.T.	DOWNSTREAM ANCHOR TERMINAL

GRAPHIC SCALE 1"=100'

0 100 200

NOTE: 1. SEE RETAINING WALL PLANS FOR ADDITIONAL RAIL LOCATIONS.

REV. NO.	C.O. NO.	DESCRIPTION	DATE	BY

STATE OF TEXAS
JOSEPH PERKINS
97522
LICENSED
PROFESSIONAL ENGINEER
4/30/13

Graham Associates, Inc.
CONSULTING ENGINEERS & PLANNERS
600 SIX FLAGS DRIVE, SUITE 500
ARLINGTON, TEXAS 76011 (817) 640-8535
TBPE FIRM: F-1191/TBPLS FIRM: 101538-00

© 2013 Texas Department of Transportation

S.H.-121
(SAM RAYBURN TOLLWAY)
AT SOUTH COLONY BLVD
DELINEATOR, M.B.G.F., & TRAFFIC RAIL LAYOUT
STA. 528+00 TO STA. 540+00

SHEET 1 OF 4 SHEETS

FED. RD. DIV. NO.	STATE PROJECT NO.		SHEET NO.
6	(SEE TITLE SHEET)		179
STATE	DIST.	COUNTY	
TEXAS	DAL	DENTON	
CONTROL NO.	SECTION NO.	JOB NO.	HIGHWAY NO.
0364	03	095	S.H.-121

PLOTTED ON: 4/30/2013 9:45 AM
FILE NAME: J:\COLONY\SH-121\CAD\SHEETS\BARRIER LAYOUT 1.DWG

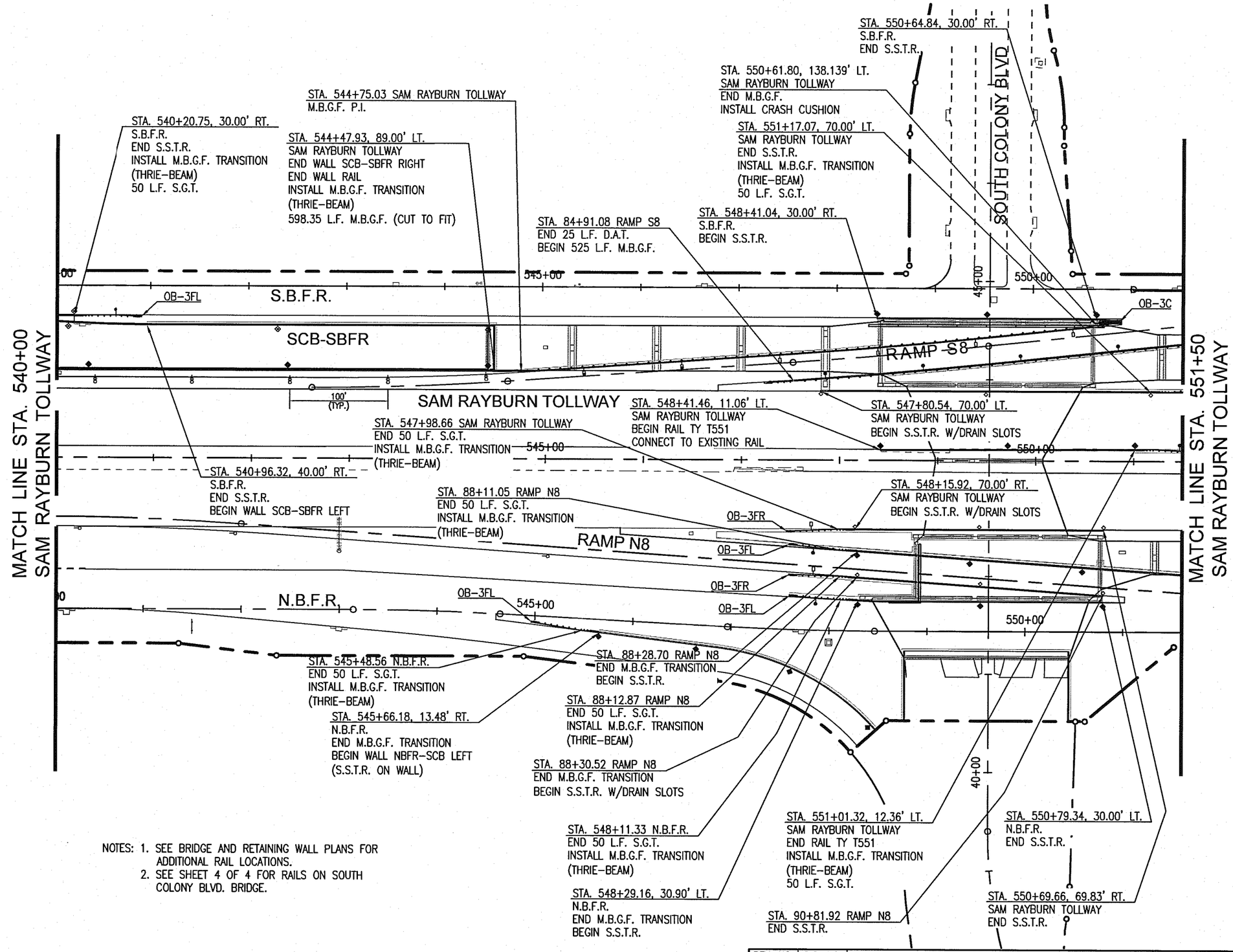

NOTES:
1. SEE BRIDGE AND RETAINING WALL PLANS FOR ADDITIONAL RAIL LOCATIONS.
2. SEE SHEET 4 OF 4 FOR RAILS ON SOUTH COLONY BLVD. BRIDGE.

LEGEND

	D-SW SZ 1 (FLX) SRF
	D-SW SZ 1 (FLX) GF2
	D-DW SZ 1 (TYC) GF1 (BI)
	D-DW SZ 1 (FLX) GND
	D-SW SZ 1 (TYC) CTB
	D-DW SZ 1 (TYC) CTB (BI)
	D-SY SZ 1 (TYC) CTB
	D-SY SZ 1 (FLX) GF2
	D-SW SZ 1 (TYC) CTB (BR)
S.G.T.	SINGLE GUARDRAIL TERMINAL
D.A.T.	DOWNSTREAM ANCHOR TERMINAL

GRAPHIC SCALE 1"=100'

0 100 200

STATE OF TEXAS
JOSEPH PERKINS
97522
LICENSED PROFESSIONAL ENGINEER
4/30/13

Graham Associates, Inc.
CONSULTING ENGINEERS & PLANNERS
600 SIX FLAGS DRIVE, SUITE 500
ARLINGTON, TEXAS 76011 (817) 640-8535
TBPE FIRM: F-1191/TBPLS FIRM: 101538-00

© 2013 Texas Department of Transportation

S.H.-121 (SAM RAYBURN TOLLWAY) AT SOUTH COLONY BLVD

DELINEATOR, M.B.G.F., & TRAFFIC RAIL LAYOUT

STA. 540+00 TO STA. 551+50

SHEET 2 OF 4 SHEETS

REV. NO.	C.O. NO.	DESCRIPTION	DATE	BY

FED. RD. DIV. NO.	STATE PROJECT NO.		SHEET NO.
6	(SEE TITLE SHEET)		180
STATE	DIST.	COUNTY	
TEXAS	DAL	DENTON	
CONTROL NO.	SECTION NO.	JOB NO.	HIGHWAY NO.
0364	03	095	S.H.-121

PLOTTED BY: BLAKE BRADLEY
PLOTTED ON: 4/30/2013 9:31 AM
FILE NAME: J:\COLONY\SH-121\CAD\SHEETS\BARRIER LAYOUT 2.DWG
SHEET SIZE: 11" X 17" 1' = 1'

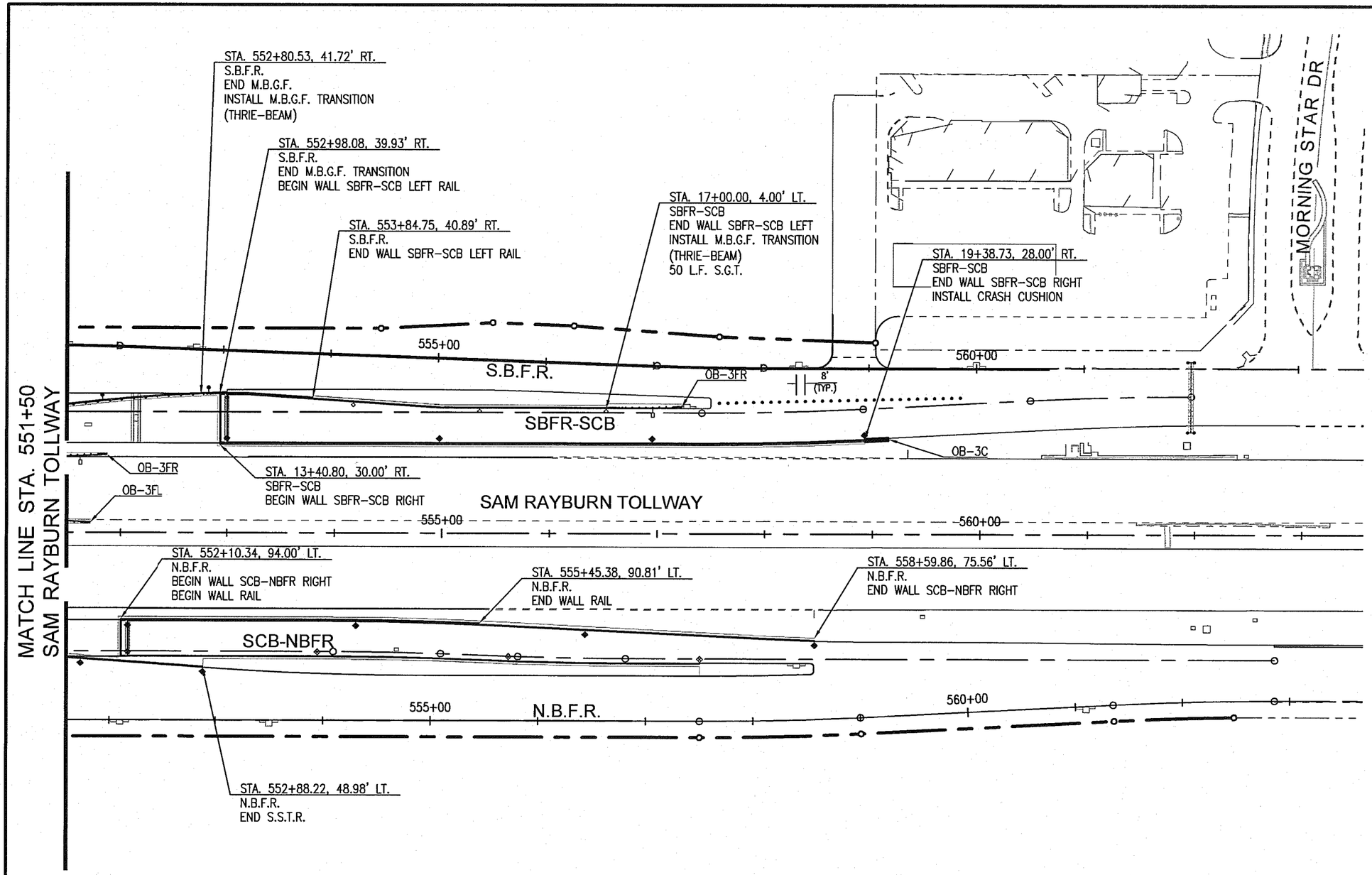

LEGEND

●	D-SY SZ 1 (FLX) GF2
□	D-SW SZ 1 (FLX) GF2
◇	D-SW SZ 1 (TYC) CTB
⊗	D-DW SZ 1 (TYC) CTB (BI)
◆	D-SY SZ 1 (TYC) CTB
◈	D-SW SZ 1 (TYC) CTB (BR)
S.G.T.	SINGLE GUARDRAIL TERMINAL
D.A.T.	DOWNSTREAM ANCHOR TERMINAL
•	D-DW SZ 1 (FLX) SRF

GRAPHIC SCALE 1"=100'

0 100 200

NOTE: SEE BRIDGE AND RETAINING WALL PLANS FOR ADDITIONAL RAIL LOCATIONS.

REV. NO.	C.O. NO.	DESCRIPTION	DATE	BY

STATE OF TEXAS
JOSEPH PERKINS
97522
LICENSED
PROFESSIONAL ENGINEER
4/30/13

Graham Associates, Inc.
CONSULTING ENGINEERS & PLANNERS
600 SIX FLAGS DRIVE, SUITE 500
ARLINGTON, TEXAS 76011 (817) 640-8535
TBPE FIRM: F-1191/TBPLS FIRM: 101538-00

© 2013 Texas Department of Transportation

S.H.-121 (SAM RAYBURN TOLLWAY) AT SOUTH COLONY BLVD

DELINEATOR, M.B.G.F., & TRAFFIC RAIL LAYOUT

STA. 551+50 TO STA. 563+50

SHEET 3 OF 4 SHEETS

FED. RD. DIV. NO.	STATE PROJECT NO.		SHEET NO.
6	(SEE TITLE SHEET)		181
STATE	DIST.	COUNTY	
TEXAS	DAL	DENTON	
CONTROL NO.	SECTION NO.	JOB NO.	HIGHWAY NO.
0364	03	095	S.H.-121

PLOTTED BY: JOE PERKINS
PLOTTED ON: 4/28/2013 12:10 PM
FILE NAME: J:\COLONY\SH-121\CAD\SHEETS\BARRIER LAYOUT 3.DWG
SHEET SIZE: 11" X 17" 1' = 1'

REV. NO.	C.O. NO.	DESCRIPTION	DATE	BY

P.C.T.B. P.I. POINTS		
NO.	STATION	OFFSET
1	STA. 43+56.46	20.19' LT.
2	STA. 43+84.22	31.56' LT.

LEGEND

◈ D-SW SZ 1 (TYC) CTB (BR)

P.C.T.B. PRECAST CONCRETE TRAFFIC BARRIER

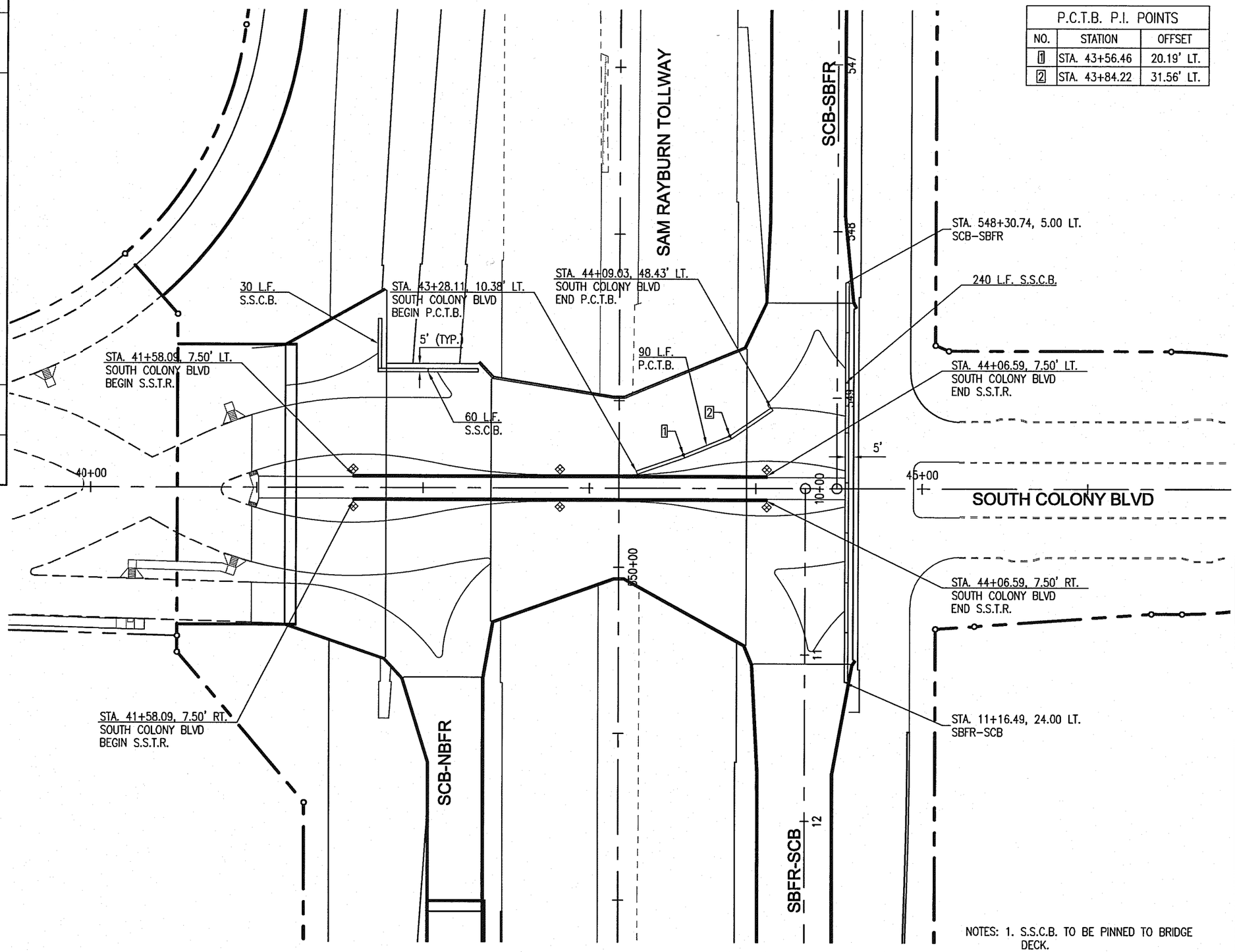

GRAPHIC SCALE 1"=60'

0 60 120

NOTES:
1. S.S.C.B. TO BE PINNED TO BRIDGE DECK.
2. SEE BRIDGE AND RETAINING WALL PLANS FOR ADDITIONAL RAIL LOCATIONS AND INFORMATION.

STATE OF TEXAS
JOSEPH PERKINS
97522
LICENSED
PROFESSIONAL ENGINEER
4/30/13

Graham Associates, Inc.
CONSULTING ENGINEERS & PLANNERS
800 SIX FLAGS DRIVE, SUITE 500
ARLINGTON, TEXAS 76011 (817) 640-8535
TBPE FIRM: F-1191/TBPLS FIRM: 101538-00

© 2013 Texas Department of Transportation

S.H.-121 (SAM RAYBURN TOLLWAY) AT SOUTH COLONY BLVD.

DELINEATOR, M.B.G.F., & TRAFFIC RAIL LAYOUT SOUTH COLONY BLVD. BRIDGE

SHEET 4 OF 4 SHEETS

FED. RD. DIV. NO.	STATE PROJECT NO.		SHEET NO.
6	(SEE TITLE SHEET)		182
STATE	DIST.	COUNTY	
TEXAS	DAL	DENTON	
CONTROL NO.	SECTION NO.	JOB NO.	HIGHWAY NO.
0364	03	095	S.H.-121

PLOTTED BY: JOE PERKINS
PLOTTED ON: 4/27/2013 1:05 PM
FILE NAME: J:\COLONY\SH-121\CAD\SHEETS\BARRIER LAYOUT 4.DWG
SHEET SIZE: 11" X 17" 1" = 1"

REV. NO.	C.O. NO.	DESCRIPTION	DATE	BY

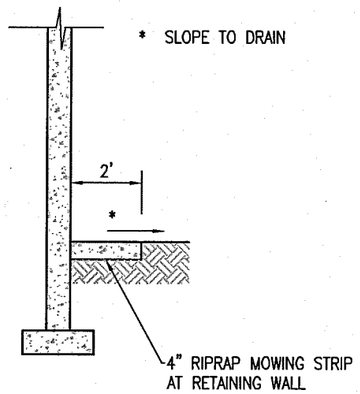

MOW STRIP AT RETAINING WALL

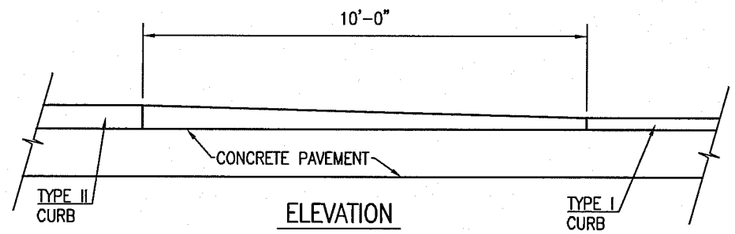

CURB TRANSITION (TYPE A)
TYPE II CURB TO TYPE I CURB

(PAID FOR AS TYPE 1)

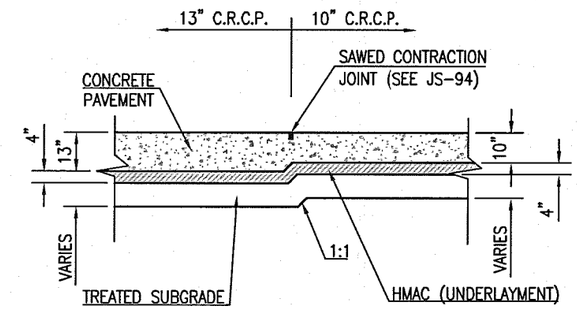

TRANSITION SECTION
13" TO 10" C.R.C.P.

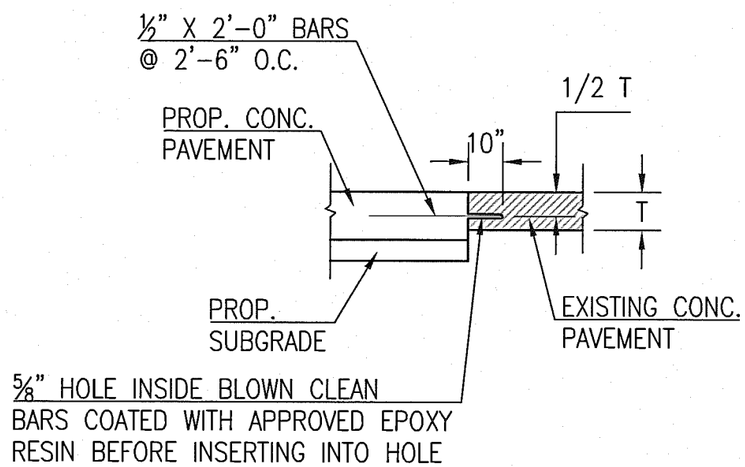

ANCHOR JOINT DETAIL

TO BE USED WHERE PROPOSED CONCRETE PAVEMENT MEETS EXISTING CONCRETE PAVEMENT.

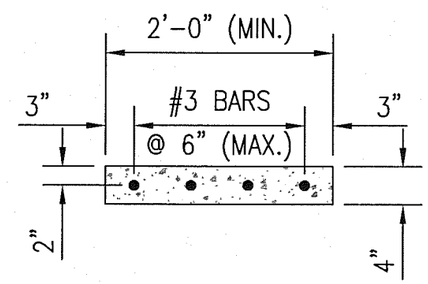

RIPRAP MOW STRIP

NOT TO SCALE
NOTE: TO BE PAID FOR AS RIPRAP

STATE OF TEXAS
JOSEPH PERKINS
97522
LICENSED
PROFESSIONAL ENGINEER
4/30/13

Graham Associates, Inc.
CONSULTING ENGINEERS & PLANNERS
600 SIX FLAGS DRIVE, SUITE 500
ARLINGTON, TEXAS 76011 (817) 640-8535
TBPE FIRM: F-1191/TBPLS FIRM: 101538-00

© 2013 Texas Department of Transportation

DETAILS

S.H.-121
(SAM RAYBURN TOLLWAY)
AT SOUTH COLONY BLVD.

MISCELLANEOUS
ROADWAY DETAILS

SHEET 1 OF 1 SHEETS

FED. RD. DIV. NO.	STATE PROJECT NO.		SHEET NO.
6	(SEE TITLE SHEET)		183
STATE	DIST.	COUNTY	
TEXAS	DAL	DENTON	
CONTROL NO.	SECTION NO.	JOB NO.	HIGHWAY NO.
0364	03	095	S.H.-121

PLOTTED BY: BILL D. FRAZIER
PLOTTED ON: 4/19/2013 10:06 AM
FILE NAME: J:\COLONY\SH-121\CAD\SHEETS\MISC RDWY DETAILS.DWG
SHEET SIZE: 11" X 17" 1' = 1'

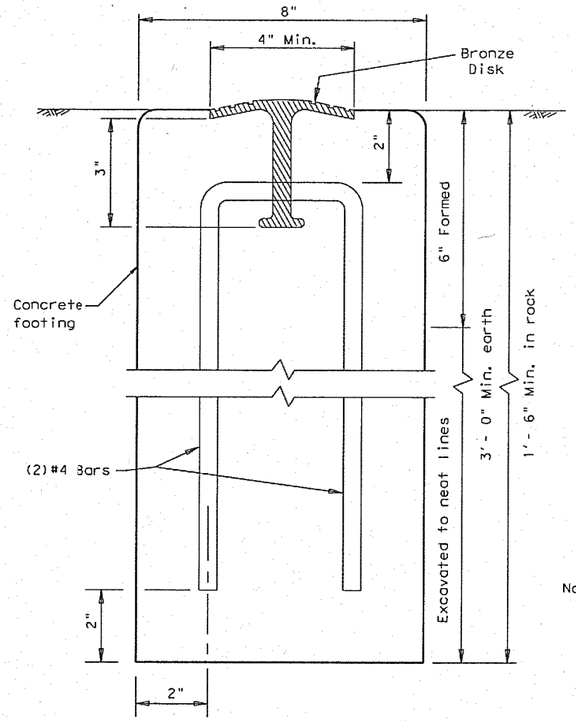

SECTION A-A

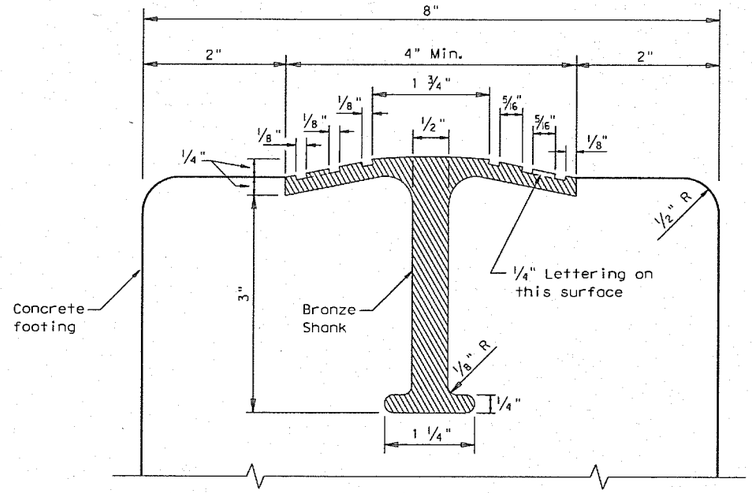

SECTION THRU TOP OF ROW MARKER

Note:
Measurement of grooves on face of disk may vary slightly. Top surface may be arched.

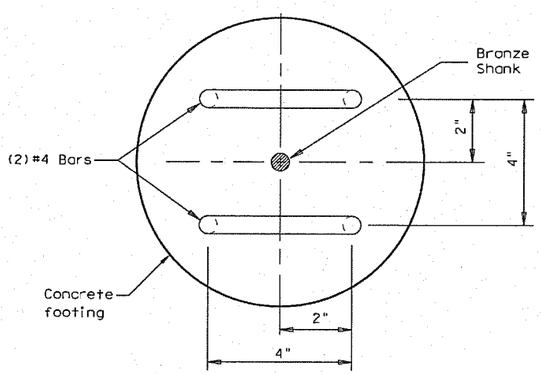

CROSS SECTION THRU MARKER

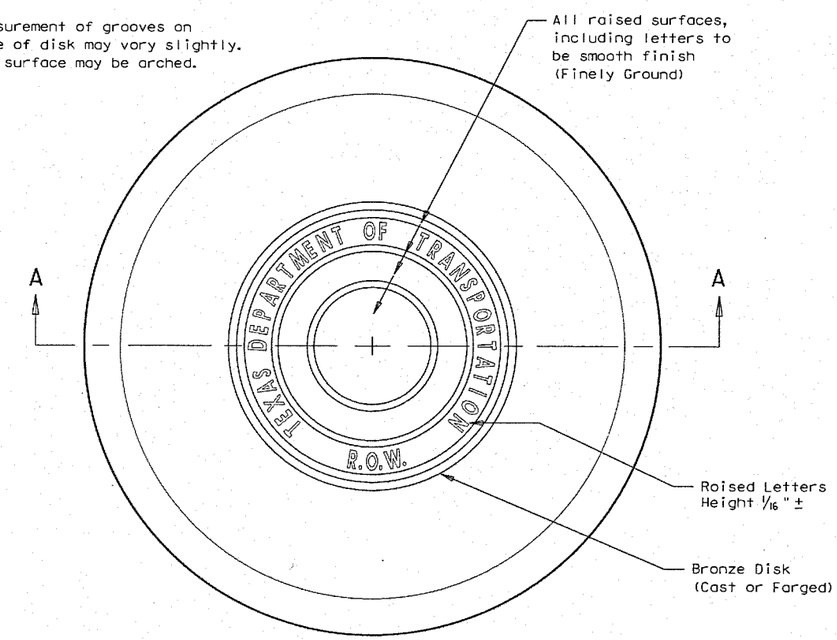

TOP VIEW OF ROW MARKER

GENERAL NOTES

1. All materials and construction shall be in accordance with Item 538, "Right of way markers."
2. Right-of-Way marker concrete shall be poured in place. The bronze disks shall be set to the correct line and grade, as directed by the Engineer.
3. The bronze disk shall be of architectural bronze with the following composition: Copper 85%, Tin 5%, Lead 5%, Zinc 5%. Excavation of the marker locations shall be made of uniform lines except for the top of 6 inches which shall be formed with removable forms. The top part of the marker around the bronze disk shall receive a trowel finish.
4. Once the concrete has set, the Engineer will stencil the required survey data and, with a chisel or center punch, cut across marker the exact location of the Right-of-Way line in the bronze disk.

DISCLAIMER:
The use of this standard is governed by the "Texas Engineering Practice Act". No warranty of any kind is made by TxDOT for any purpose whatsoever. TxDOT assumes no responsibility for the conversion of this standard to other formats or for incorrect results or damages resulting from its use.

LEVELS DISPLAYED

Texas Department of Transportation
Design Division (Roadway)

RIGHT-OF-WAY MARKER

M-10

FILE: m10.dgn	DN: TxDOT	CK: AM	DW: BD/VP	CK: VP		
© TxDOT February 1992	DISTRICT	FEDERAL AID PROJECT				SHEET
REVISIONS	DAL					184
	COUNTY		CONTROL	SECT	JOB	HIGHWAY
	DENTON		0364	03	095	SH-121

FILE NAME: J:\COLONY\SH-121\CAD\SHEETS\DETAILS\162-M-10.DWG
SHEET SIZE: 11" X 17" 1" = 1'

DISCLAIMER: The use of this standard is governed by the "Texas Engineering Practice Act". No warranty of any kind is made by TxDOT for any purpose whatsoever. TxDOT assumes no responsibility for the conversion of this standard to other formats or for incorrect results or damages resulting from its use.

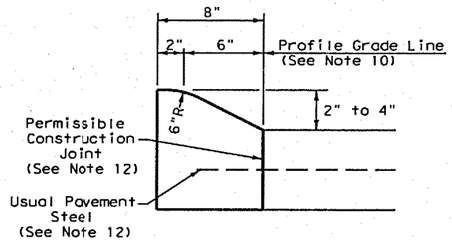

TYPE I CURB (MONOLITHIC)
2" - 4" HEIGHT

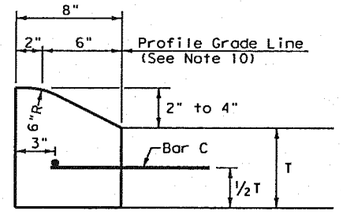

TYPE I CURB
2" - 4" HEIGHT

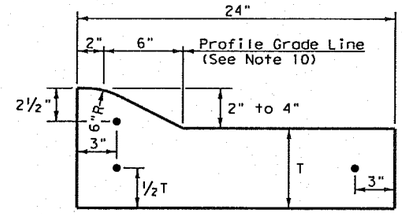

TYPE I CURB AND GUTTER
2" - 4" HEIGHT

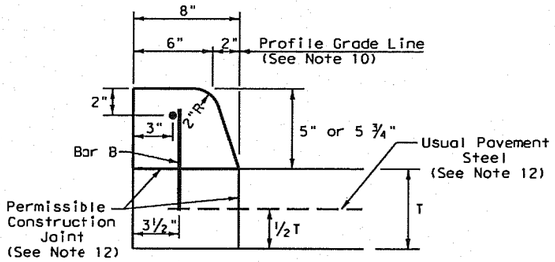

TYPE II CURB (MONOLITHIC)
5" - 5 ¾" HEIGHT

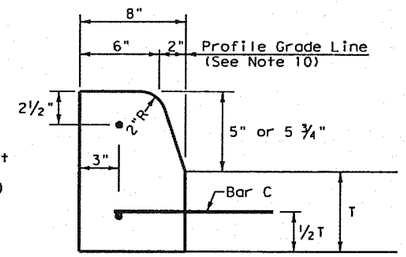

TYPE II CURB
5" - 5 ¾" HEIGHT

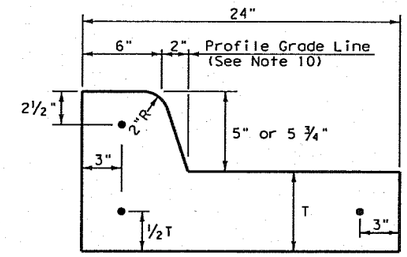

TYPE II CURB AND GUTTER
5" - 5 ¾" HEIGHT

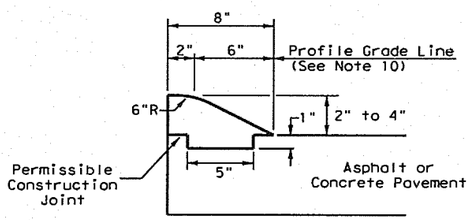

TYPE III CURB (KEYED)
2" - 4" HEIGHT

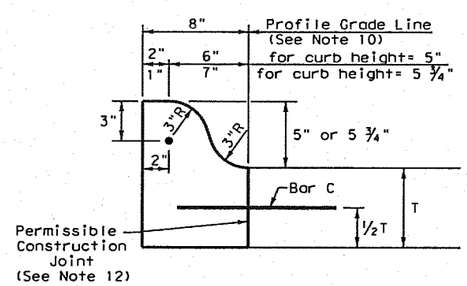

TYPE IIa CURB
5" - 5 ¾" HEIGHT

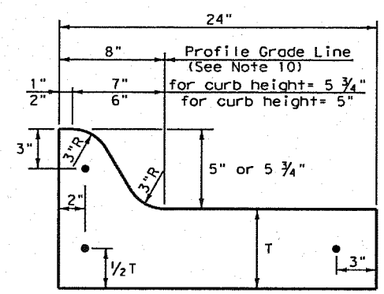

TYPE IIa CURB AND GUTTER
5" - 5 ¾" HEIGHT

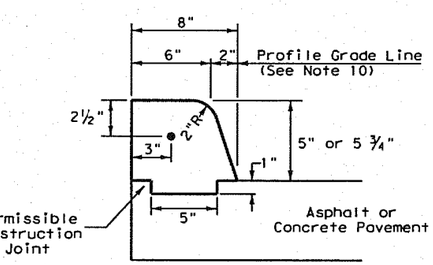

TYPE IV CURB (KEYED)
5" - 5 ¾" HEIGHT

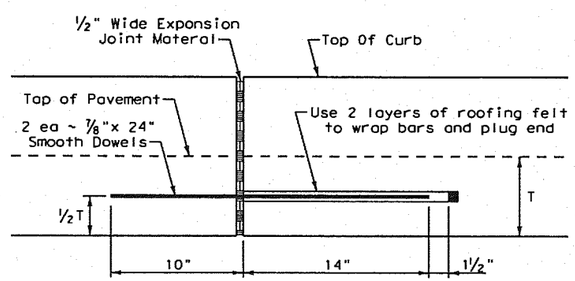

EXPANSION JOINT DETAIL

Curb Transition Note:
Field conditions may require a longer or shorter transition, and shall be shown elsewhere in the plans, or as directed by the Engineer.

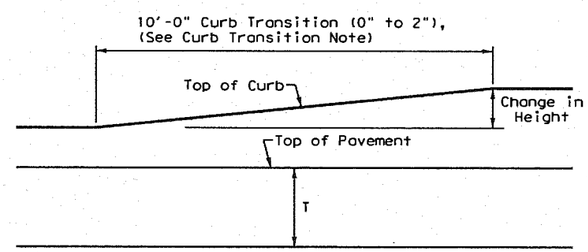

CURB TRANSITION
Note: To be paid for as Highest Curb

General Notes

1. All materials and construction shall be in accordance with Item 529, "Concrete Curb, Gutter, and Combined Curb and Gutter."
2. Concrete shall be Class A.
3. When reinforcing bars are used, they shall be No.4 unless otherwise shown. The use of synthetic fiber in lieu of steel reinforcing is acceptable, provided the fiber producer is on the Department Producer List (MPL), maintained by TxDOT, Construction Division.
4. Round exposed sharp edges with a rounding tool, to a minimum radius of ¼ inch.
5. All existing curbs and driveways to be removed shall be sawed or removed at existing joints.
6. Where concrete curb is placed on existing concrete pavement, the pavement shall be drilled and the reinforcing bars grouted in place.
7. Expansion and contraction joints shall be constructed to match pavement joints in all curbs and curb and gutter adjacent to jointed concrete pavement. Where placement of curb or curb and gutter is not adjacent to concrete pavement, expansion joints shall be provided at structures, curb returns at streets, and at locations directed by The Engineer.
8. Vertical and horizontal dowel bars and transverse reinforcing bars shall be placed at four feet C~C.
9. Dimension 'T' shown is the thickness of concrete pavement. When curb is installed adjacent to flexible pavement dimension 'T' is 8" maximum.
10. Usual profile grade line. Refer to typical sections and plan-profile sheets for exact locations.
11. One-half inch expansion joint material shall be provided where curb or curb and gutter is adjacent to sidewalk or riprap.
12. When vertical permissible construction joints are used, resulting in a longitudinal construction joint in the pavement, the longitudinal pavement steel shall be placed in accordance with pavement details shown elsewhere in the plans for longitudinal construction joints. Reinforcing steel for curb section shall then conform to that required for concrete curb.

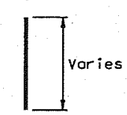

BAR B

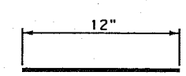

BAR C

Texas Department of Transportation
Design Division Standard

CONCRETE CURB AND CURB AND GUTTER

CCCG-12

FILE: cccg12	DN: TxDOT	CK: AM	DW: VP	CK:
©TxDOT 1995	CONT	SECT	JOB	HIGHWAY
REVISIONS	0364	03	095	SH-121
	DIST		COUNTY	SHEET NO.
	DAL		DENTON	185

DATE:
FILE:

FILE NAME: J:\GOLIAD\SH-121\CAD\SHEETS\DETAILS\DETAILS\175-PVMT DETAILS.DWG
SHEET SIZE: 11" X 17" 1' = 1'

DISCLAIMER:
The use of this standard is governed by the "Texas Engineering Practice Act". No warranty of any kind is made by TxDOT for any purpose whatsoever. TxDOT assumes no responsibility for the conversion of this standard to other formats or for incorrect results or damages resulting from its use.

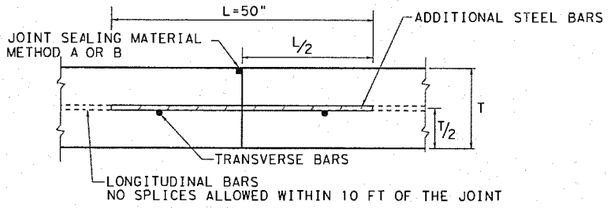

TRANSVERSE CONSTRUCTION JOINT
SECTION X - X

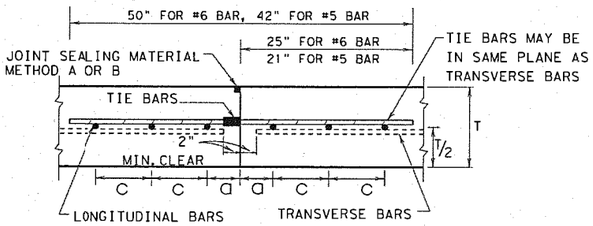

LONGITUDINAL CONSTRUCTION JOINT
SECTION Y - Y

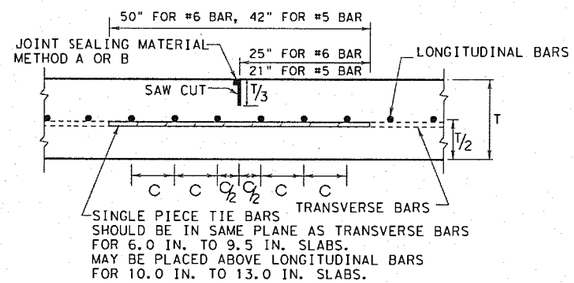

LONGITUDINAL CONTRACTION JOINT
SECTION Z - Z

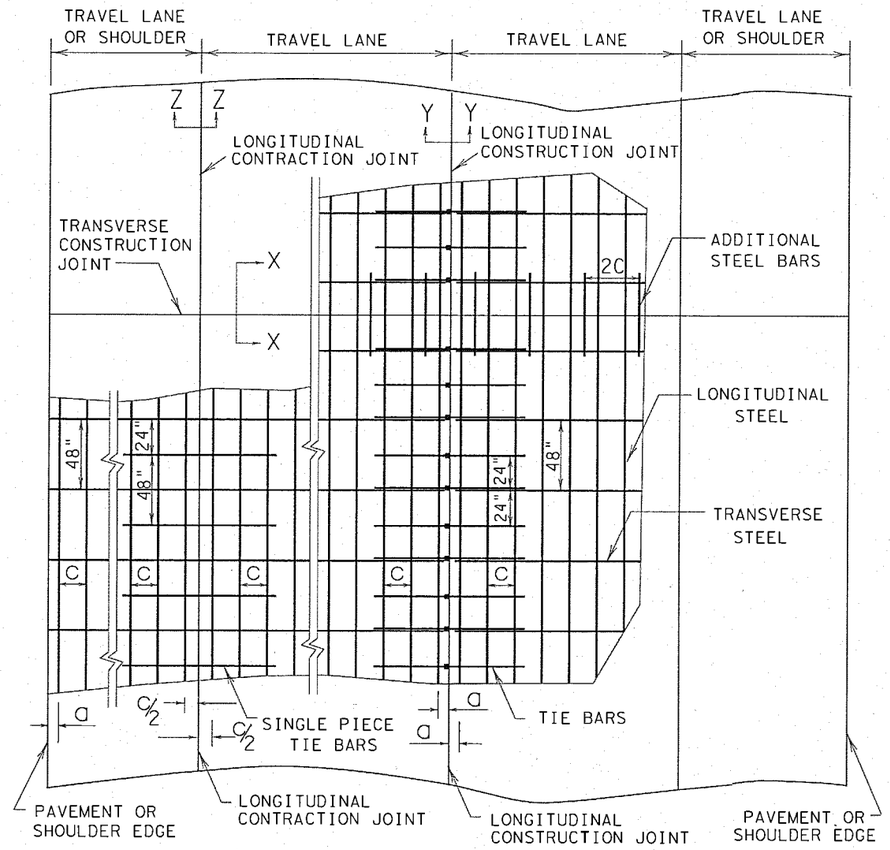

TYPICAL PAVEMENT LAYOUT

PLAN VIEW (NOT TO SCALE)

GENERAL NOTES

1. DETAILS FOR PAVEMENT WIDTH, PAVEMENT THICKNESS AND THE CROWN CROSS-SLOPE SHALL BE SHOWN ELSEWHERE IN THE PLANS. PAVEMENTS WIDER THAN 100 FT. WITHOUT A FREE LONGITUDINAL JOINT, ARE NOT COVERED BY THIS STANDARD.
2. THE DETAIL FOR THE JOINT SEALANT AND RESERVOIR IS SHOWN ON STANDARD SHEET "CONCRETE PAVING DETAILS, JOINT SEALS."
3. ALL THE REINFORCING STEEL AND TIE BARS SHALL BE DEFORMED STEEL BARS CONFORMING TO ASTM A 615 (GRADE 60) OR ASTM A 996 (GRADE 60). STEEL BAR SIZES SHALL CONFORM TO TABLE NO. 1 & 2.
4. STEEL BAR PLACEMENT TOLERANCE SHALL BE +/- 1 IN. HORIZONTALLY AND +/- 0.5 IN. VERTICALLY. CALCULATED AVERAGE BAR SPACING (CONCRETE PLACEMENT WIDTH / NUMBER OF LONGITUDINAL BARS) SHALL CONFORM TO TABLE NO.1 AND AS SPECIFIED.
5. PAVEMENT WIDTHS OF MORE THAN 15 FT. SHALL HAVE A LONGITUDINAL JOINT (SECTION Z-Z OR SECTION Y-Y). THESE JOINTS SHALL BE LOCATED WITHIN 6 IN. OF THE LANE LINE UNLESS THE JOINT LOCATION IS SHOWN ELSEWHERE ON THE PLANS.
6. THE SAW CUT DEPTH FOR THE LONGITUDINAL CONTRACTION JOINT SHALL BE ONE THIRD OF THE SLAB THICKNESS.
7. WHEN APPROVED BY THE ENGINEER, SINGLE PIECE TIE BARS MAY BE USED BY INSERTING INTO PLASTIC CONCRETE AT LONGITUDINAL CONSTRUCTION JOINTS.
8. WHEN TYING CONCRETE GUTTER AT A LONGITUDINAL JOINT, THE TIE BAR LENGTH OR POSITION MAY BE ADJUSTED. PROVIDE 3 IN. OF CONCRETE COVER FROM THE BACK OF GUTTER TO THE END OF TIE BAR.
9. MISSING OR DAMAGED TIE BARS SHALL BE REPLACED BY DRILLING AND EPOXY GROUTING AT THE CONTRACTOR'S EXPENSE.
10. OMIT TIE BARS LOCATED WITHIN 18 IN. OF THE TRANSVERSE CONSTRUCTION JOINTS. USE HAND-OPERATED IMMERSION VIBRATORS TO CONSOLIDATE THE CONCRETE ADJACENT TO ALL FORMED JOINTS.
11. OBTAIN THE ENGINEER'S WRITTEN APPROVAL, IF THE CONCRETE MIX DESIGN USES MORE THAN 5.5 SACKS/CY.
12. LONGITUDINAL REINFORCING STEEL SPLICES SHALL BE A MINIMUM OF 25 IN.

TABLE NO. 2 TRANSVERSE STEEL AND TIE BARS

SLAB THICKNESS (IN.)	TRANSVERSE STEEL		TIE BARS AT LONGITUDINAL CONTRACTION JOINT		TIE BARS AT LONGITUDINAL CONSTRUCTION JOINT	
	BAR SIZE	SPACING (IN.)	BAR SIZE	SPACING (IN.)	BAR SIZE	SPACING (IN.)
6.0 - 7.5	#5	48	#5	48	#5	24
8.0 - 13.0	#5	48	#6	48	#6	24

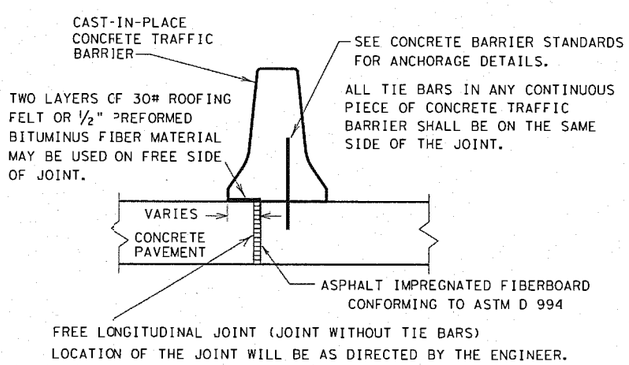

FREE LONGITUDINAL JOINT DETAIL

TABLE NO. 1 LONGITUDINAL STEEL

SLAB THICKNESS AND BAR SIZE		REGULAR STEEL BARS	FIRST SPACING AT EDGE OR JOINT	ADDITIONAL STEEL BARS AT TRANSVERSE CONSTRUCTION JOINT	
T (IN.)	BAR SIZE	SPACING c (IN.)	SPACING a (IN.)	SPACING 2 x c (IN.)	LENGTH L (IN.)
6.0	#5	7.5	3 TO 4	15	50
6.5	#5	7.0	3 TO 4	14	50
7.0	#5	6.5	3 TO 4	13	50
7.5	#5	6.0	3 TO 4	12	50
8.0	#6	9.0	3 TO 4	18	50
8.5	#6	8.5	3 TO 4	17	50
9.0	#6	8.0	3 TO 4	16	50
9.5	#6	7.5	3 TO 4	15	50

TABLE NO. 1 LONGITUDINAL STEEL (Cont.)

SLAB THICKNESS AND BAR SIZE		REGULAR STEEL BARS	FIRST SPACING AT EDGE OR JOINT	ADDITIONAL STEEL BARS AT TRANSVERSE CONSTRUCTION JOINT	
T (IN.)	BAR SIZE	SPACING c (IN.)	SPACING a (IN.)	SPACING 2 x c (IN.)	LENGTH L (IN.)
10.0	#6	7.0	3 TO 4	14	50
10.5	#6	6.75	3 TO 4	13.5	50
11.0	#6	6.5	3 TO 4	13	50
11.5	#6	6.25	3 TO 4	12.5	50
12.0	#6	6.0	3 TO 4	12	50
12.5	#6	5.75	3 TO 4	11.5	50
13.0	#6	5.5	3 TO 4	11	50

Texas Department of Transportation
Design Division Standard

CONTINUOUSLY REINFORCED CONCRETE PAVEMENT

ONE LAYER STEEL BAR PLACEMENT
T - 6 to 13 INCHES

CRCP(1)-11

FILE: crcp111.dgn	DN: TxDOT	CK: LL	DW: HC	CK:
©TxDOT November 2009	CONT	SECT	JOB	HIGHWAY
REVISIONS	0364	03	095	SH-121
10/10/2011 ADD GN #12	DIST		COUNTY	SHEET NO.
	DAL		DENTON	186

DATE:
FILE:

FILE NAME: J:\COLORY\SH-121\CAD\SHEETS\DETAILS\175-PVMT DETAILS.DWG
SHEET SIZE: 11" X 17" 1" = 1"

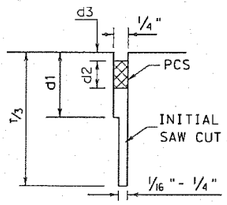

SAWED
LONGITUDINAL JOINT

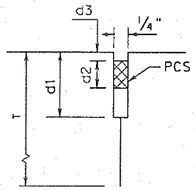

LONGITUDINAL
CONSTRUCTION JOINT

LONGITUDINAL JOINT SEALS

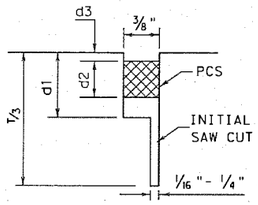

SAWED
CONTRACTION JOINT

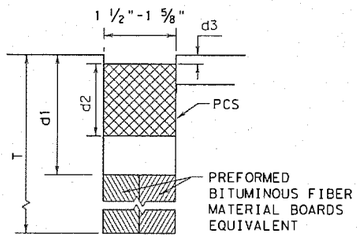

FORMED
FORMED EXPANSION JOINT

TRANSVERSE JOINT SEALS

METHOD A: PREFORMED COMPRESSION SEALS (PCS)
(CLASS 6 PREFORMED JOINT SEALANT)

GENERAL NOTES FOR METHOD "A"

1. UNLESS OTHERWISE SHOWN IN THE PLANS, EITHER METHOD "A" OR METHOD "B" MAY BE USED.
2. THE LOCATION OF JOINTS SHALL BE AS SHOWN ELSEWHERE IN THE PLANS.
3. DIMENSIONS d1, d2, AND d3 SHALL BE IN ACCORDANCE WITH THE PREFORMED COMPRESSION SEAL MANUFACTURES RECOMMENDATION.
4. THE JOINT RESERVOIR FOR SEALANT SHALL BE SAWED UNLESS OTHERWISE SHOWN ON THE PLANS FOR THE LONGITUDINAL AND TRANSVERSE CONSTRUCTION AND THE TWO SAWED JOINTS.
5. THE JOINTS SHALL BE CLEANED IN ACCORDANCE WITH THE ITEM 438 AND PRIOR TO BEGINNING OPERATIONS, THE CONTRACTOR SHALL SUBMIT A STATEMENT FROM THE SEALANT MANUFACTURER SHOWING THE RECOMMENDED EQUIPMENT AND INSTALLATION PROCEDURES TO BE USED.
6. THE SAW CUT FOR THE LONGITUDINAL JOINT SHALL BE ONE FOURTH THE SLAB THICKNESS WHEN CRUSHED LIMESTONE IS USED AS THE COARSE AGGREGATE.

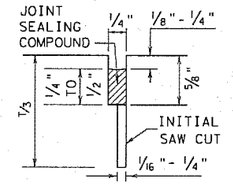

SAWED
LONGITUDINAL JOINT

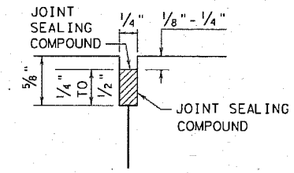

LONGITUDINAL OR TRANSVERSE
CONSTRUCTION JOINT

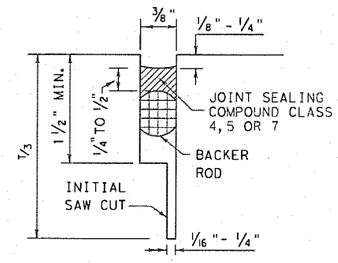

TRANSVERSE SAWED
CONTRACTION JOINT

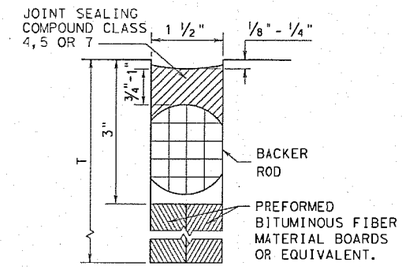

TRANSVERSE FORMED
EXPANSION JOINT

METHOD B: JOINT SEALING COMPOUND

GENERAL NOTES FOR METHOD "B"

1. UNLESS OTHERWISE SHOWN IN THE PLANS, EITHER METHOD "A" OR METHOD "B" MAY BE USED.
2. THE LOCATION OF JOINTS SHALL BE AS SHOWN ELSEWHERE IN THE PLANS.
3. THE ENGINEER SHALL SELECT A TARGET PLACEMENT THICKNESS FOR THE SEALANT DETAILS WHICH SHOW RANGES IN THICKNESS. THE TARGET THICKNESS WILL NORMALLY BE THE MIDPOINT OF THE RANGE.
4. THE JOINT RESERVOIR FOR SEALANT SHALL BE SAWED UNLESS OTHERWISE SHOWN ON THE PLANS FOR THE LONGITUDINAL AND TRANSVERSE CONSTRUCTION AND THE TWO SAWED JOINTS.
5. THE JOINTS SHALL BE CLEANED IN ACCORDANCE WITH THE ITEM 438 AND PRIOR TO BEGINNING OPERATIONS, THE CONTRACTOR SHALL SUBMIT A STATEMENT FROM THE SEALANT MANUFACTURER SHOWING THE RECOMMENDED EQUIPMENT AND INSTALLATION PROCEDURES TO BE USED.
6. THE SAW CUT FOR THE LONGITUDINAL JOINT SHALL BE ONE FOURTH THE SLAB THICKNESS WHEN CRUSHED LIMESTONE IS USED AS THE COARSE AGGREGATE.

Texas Department of Transportation
Design Division (Pavement)

CONCRETE PAVING DETAILS
JOINT SEALS

JS-94

© TxDOT SEPTEMBER 1994

DN: LJB	CK: LJB	DW: BGD	CK: GLG	REG NO.: R0000
MODIFICATIONS	STATE DISTRICT	FEDERAL REGION	FEDERAL AID PROJECT #	SHEET
	DAL	6		187

COUNTY	CONTROL	SECTION	JOB	HIGHWAY
DENTON	0364	03	095	SH-121

FILE NAME: J:\COLONY\SH-121\CAD\SHEETS\DETAILS\175-PVMT DETAILS.DWG
SHEET SIZE: 11" X 17" 1" = 1"
LEVELS DISPLAYED
ACC: /usr/d481303
FILE: JS94.DGN

TYPE 1

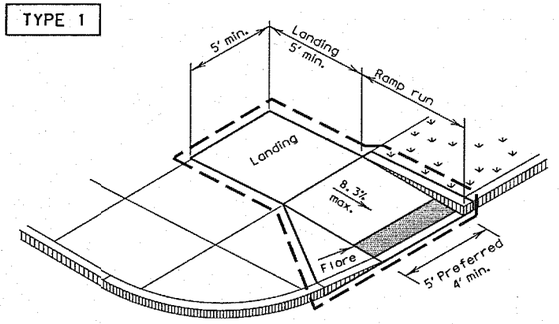

PERPENDICULAR CURB RAMP

TYPE 2

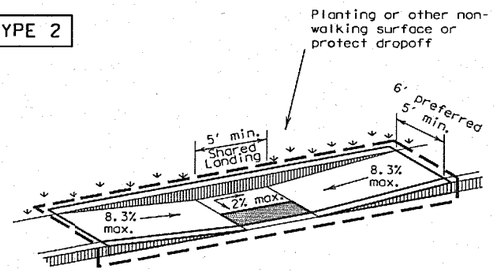

PARALLEL CURB RAMP
(Use only where water will not pond in the landing.)

TYPE 5

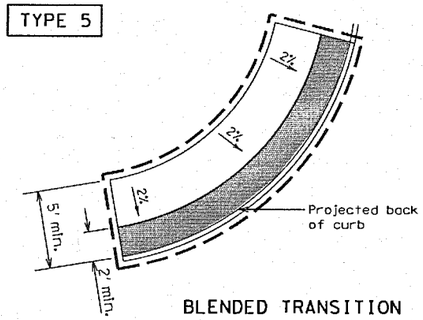

BLENDED TRANSITION

TYPE 20

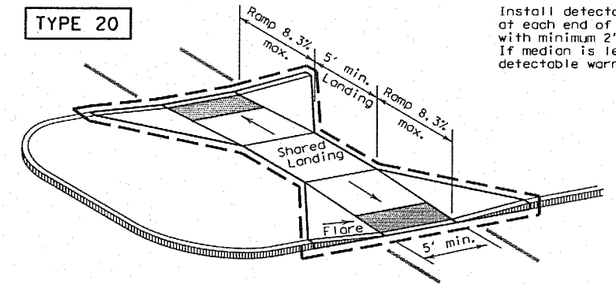

Install detectable warning surface at each end of cut-through ramp with minimum 2' smooth surface between. If median is less than 6' wide, eliminate detectable warning surfaces.

TYPE 21

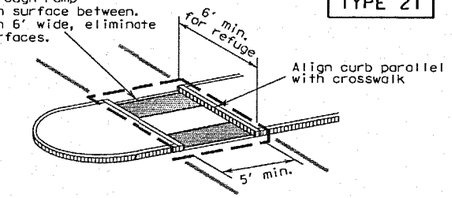

Curb details are shown elsewhere in the plans.

CURB RAMPS AT MEDIAN ISLANDS

TYPE 7

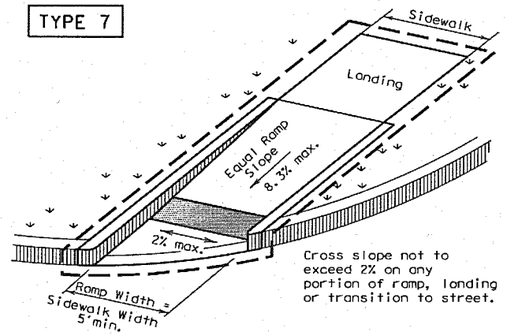

Cross slope not to exceed 2% on any portion of ramp, landing or transition to street.

(Sidewalk set back from curb)

TYPE 10

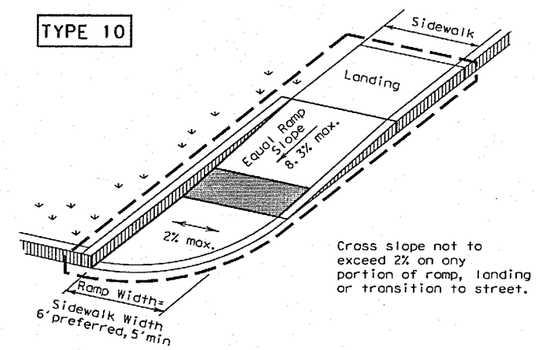

Cross slope not to exceed 2% on any portion of ramp, landing or transition to street.

(Sidewalk adjacent to curb)

DIRECTIONAL RAMPS WITHIN RADIUS

TYPE 22

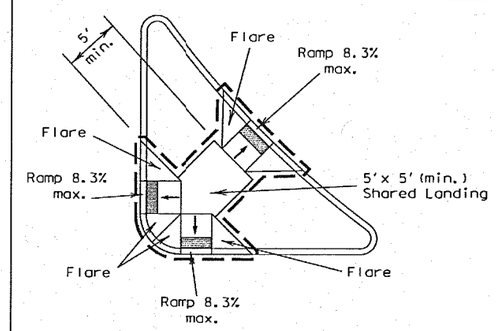

COMBINATION ISLAND RAMPS

TYPE 3

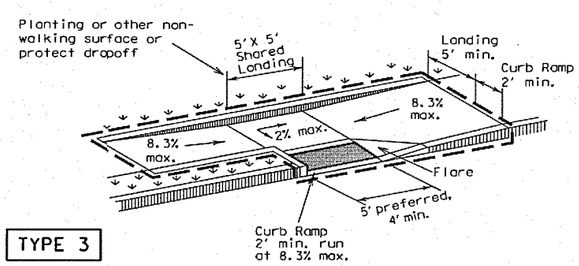

TYPE 11

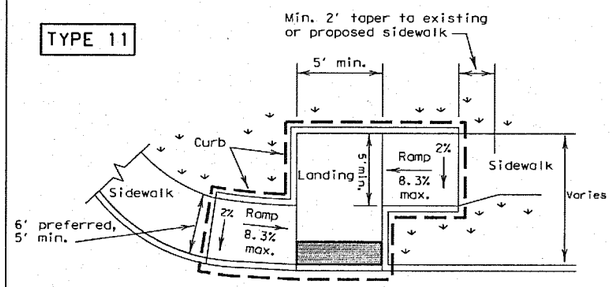

OFFSET PARALLEL CURB RAMP

TYPE 6

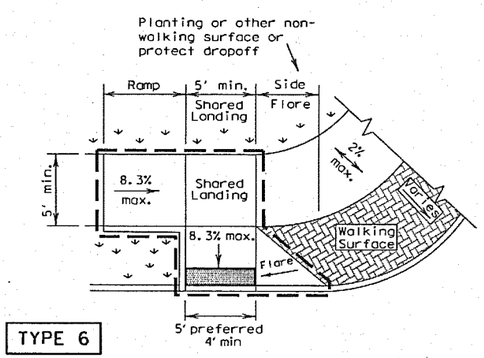

COMBINATION CURB RAMPS

NOTES / LEGEND:

See General Notes on sheet 2 of 4 for more information.

Denotes planting or non-walking surface not part of pedestrian circulation path.

Ramp Limits of Payment

Detectable Warning Surface

SHEET 1 OF 4

Texas Department of Transportation
Design Division Standard

PEDESTRIAN FACILITIES CURB RAMPS

PED-12A

FILE: ped12A.dgn	DN: TxDOT	CK: PK	DW: TxDOT	CK: HD
©TxDOT March 2002	CONT	SECT	JOB	HIGHWAY
REVISIONS VP June 13, 2012	0364	03	095	SH-121
	DIST	COUNTY		SHEET NO.
	DAL	DENTON		188

DISCLAIMER: The use of this standard is governed by the "Texas Engineering Practice Act". No warranty of any kind is made by TxDOT for any purpose whatsoever. TxDOT assumes no responsibility for the conversion of this standard to other formats or for incorrect results or damages resulting from its use.

DATE:
FILE:

FILE NAME: J:\COLORM\SH-121\CAD\SHEETS\DETAILS\184-PED.DWG
SHEET SIZE: 11" X 17" 1" = 1'

General Notes

Curb Ramps

1. Install a curb ramp or blended transition at each pedestrian street crossing.
2. All slopes shown are maximum allowable. Lesser slopes that will still drain properly should be used. Adjust curb ramp length or grade of approach sidewalks as directed.
3. The minimum sidewalk width is 5'. Where the sidewalk is adjacent to the back of curb, a 6' sidewalk width is desirable. Where a 5' sidewalk cannot be provided due to site constraints, sidewalk width may be reduced to 4' for short distances. 5'x 5' passing areas at intervals not to exceed 200' are required.
4. Landings shall be 5'x 5' minimum with a maximum 2% slope in any direction.
5. Maneuvering space at the bottom of curb ramps shall be a minimum of 4'x 4' wholly contained within the crosswalk and wholly outside the parallel vehicular travel path.
6. Maximum allowable cross slope on sidewalk and curb ramp surfaces is 2%.
7. Provide flared sides where the pedestrian circulation path crosses the curb ramp. Flared sides shall be sloped at 10% maximum, measured parallel to the curb. Returned curbs may be used only where pedestrians would not normally walk across the ramp, either because the adjacent surface is planted, substantially obstructed, or otherwise protected.
8. Additional information on curb ramp location, design, light reflective value and texture may be found in the current edition of the Texas Accessibility Standards (TAS) and 16 TAC 68.102.
9. To serve as a pedestrian refuge area, the median should be a minimum of 6' wide, measured from back of curbs. Medians should be designed to provide accessible passage over or through them.
10. Small channelization islands, which do not provide a minimum 5'x 5' landing at the top of curb ramps, shall be cut through level with the surface of the street.
11. Crosswalk dimensions, crosswalk markings and stop bar locations shall be as shown elsewhere in the plans. At intersections where crosswalk markings are not required, curb ramps shall align with theoretical crosswalks unless otherwise directed.
12. Handrails are not required on curb ramps. Provide curb ramps wherever an accessible route crosses (penetrates) a curb.
13. Curb ramps and landings shall be constructed and paid for in accordance with Item 531 "Sidewalks".
14. Place concrete at a minimum depth of 5" for ramps, flares and landings, unless otherwise directed.
15. Provide a smooth transition where the curb ramps connect to the street.
16. Curbs shown on sheet 1 within the limits of payment are considered part of the curb ramp for payment, whether it is concrete curb, gutter, or combined curb and gutter.
17. Existing features that comply with TAS may remain in place unless otherwise shown on the plans.

Detectable Warning Material

18. Curb ramps must contain a detectable warning surface that consists of raised truncated domes complying with Section 705 of the TAS. The surface must contrast visually with adjoining surfaces, including side flares. Furnish and install an approved cost-in-place dark brown or dark red detectable warning surface material adjacent to uncolored concrete, unless specified elsewhere in the plans.
19. Detectable Warning Materials must meet TxDOT Departmental Materials Specification DMS 4350 and be listed on the Material Producer List. Install products in accordance with manufacturer's specifications.
20. Detectable warning surfaces must be slip resistant and not allow water to accumulate.
21. Detectable warning surfaces shall be a minimum of 24" in depth in the direction of pedestrian travel, and extend the full width of the curb ramp or landing where the pedestrian access route enters the street.
22. Detectable warning surfaces shall be located so that the edge nearest the curb line is at the back of curb. Align the rows of domes to be perpendicular to the grade break between the ramp run and the street. Detectable warning surfaces may be curved along the corner radius.
23. Shaded areas on Sheet 1 of 4 indicate the approximate location for the detectable warning surface for each curb ramp type.

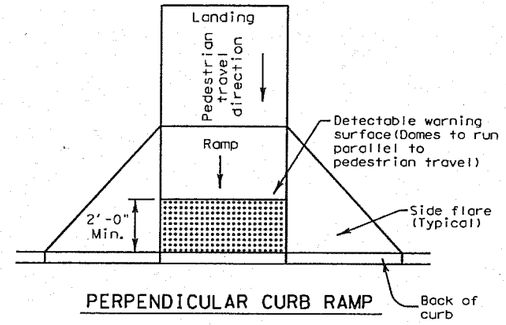

PERPENDICULAR CURB RAMP

Typical placement of detectable warning surface on sloping ramp run.

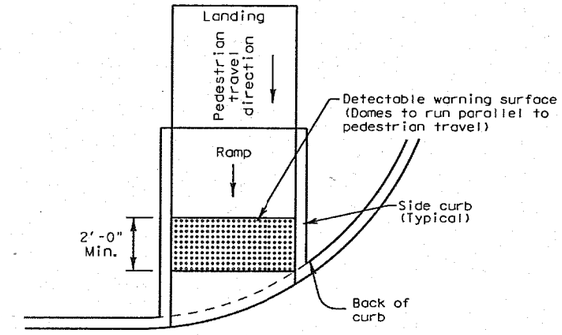

DIRECTIONAL CURB RAMP

Typical placement of detectable warning surface on sloping ramp run.

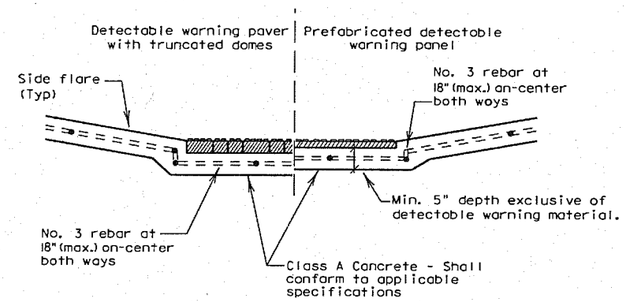

SECTION: CURB RAMP AT DETECTABLE WARNING

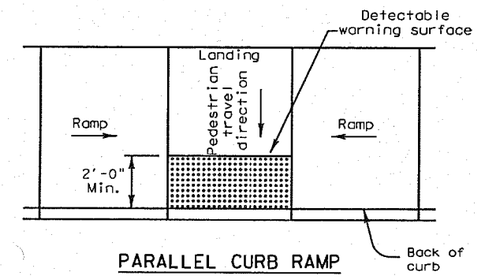

PARALLEL CURB RAMP

Typical placement of detectable warning surface on landing at street edge.

DETECTABLE WARNINGS

Detectable Warning Pavers

24. Furnish detectable warning paver units meeting all requirements of ASTM C-936, C-33. Lay in a two by two unit basket weave pattern or as directed.
25. Lay full-size units first followed by closure units consisting of at least 25 percent of a full unit. Cut detectable warning paver units using a power saw.

Sidewalks

26. Provide clear ground space at operable parts, including pedestrian push buttons. Operable parts shall be placed within one or more reach ranges specified in TAS 308.
27. Place traffic signal or illumination poles, ground boxes, controller boxes, signs, drainage facilities and other items so as not to obstruct the pedestrian access route or clear ground space.
28. Street grades and cross slopes shall be as shown elsewhere in the plans.
29. Changes in level greater than 1/4 inch are not permitted.
30. The least possible grade should be used to maximize accessibility. The running slope of sidewalks and crosswalks within the public right of way may follow the grade of the parallel roadway. Where a continuous grade greater than 5% must be provided, handrails may be desirable to improve accessibility. Handrails may also be needed to protect pedestrians from potentially hazardous conditions. If provided, handrails shall comply with TAS 505.
31. Handrail extensions shall not protrude into the usable landing area or into intersecting pedestrian routes.
32. Driveways and turnouts shall be constructed and paid for in accordance with Item "Intersections, Driveways and Turnouts". Sidewalks shall be constructed and paid for in accordance with Item, "Sidewalks".
33. Sidewalk details are shown elsewhere in the plans.

DISCLAIMER:
The use of this standard is governed by the "Texas Engineering Practice Act". No warranty of any kind is made by TxDOT for any purpose whatsoever. TxDOT assumes no responsibility for the conversion of this standard to other formats or for incorrect results or damages resulting from its use.

DATE:
FILE:

FILE NAME: u:\COLONY\SH-121\CAD\SHEETS\DETAILS\184-PED.DWG
SHEET SIZE: 11" X 17" 1" = 1"

SHEET 2 OF 4

Texas Department of Transportation
Design Division Standard

PEDESTRIAN FACILITIES CURB RAMPS

PED-12A

FILE: ped12A.dgn	DN: TxDOT	CK: PK	DW: TxDOT	CK: HD	
© TxDOT March 2002	CONT	SECT	JOB	HIGHWAY	
REVISIONS	0364	03	095	SH-121	
VP June 13, 2012	DIST		COUNTY		SHEET NO.
	DAL		DENTON		189

DISCLAIMER:
The use of this standard is governed by the "Texas Engineering Practice Act". No warranty of any kind is made by TxDOT for any purpose whatsoever. TxDOT assumes no responsibility for the conversion of this standard to other formats or for incorrect results or damages resulting from its use.

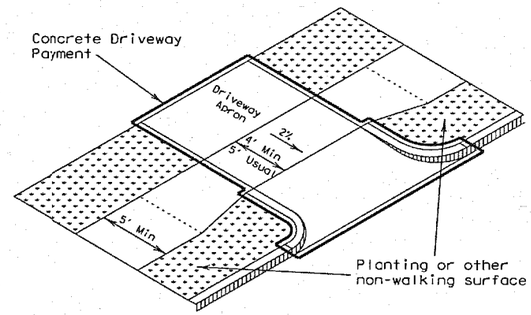

Setback sidewalk

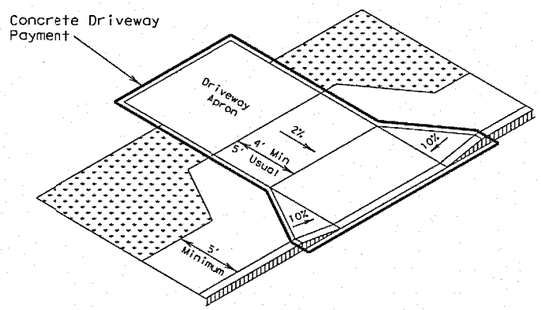

Apron offset sidewalk

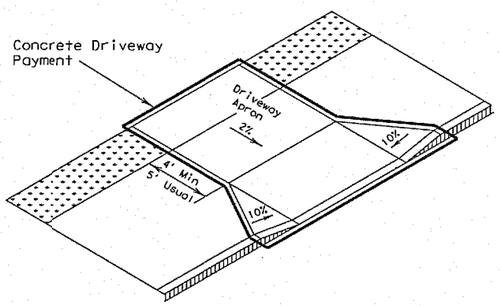

Wide sidewalk

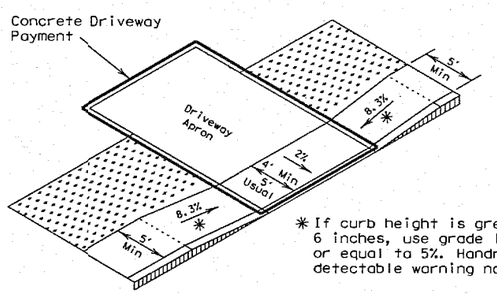

* If curb height is greater than 6 inches, use grade less than or equal to 5%. Handrail and detectable warning not required.

Ramp sidewalk

SIDEWALK TREATMENT AT DRIVEWAYS

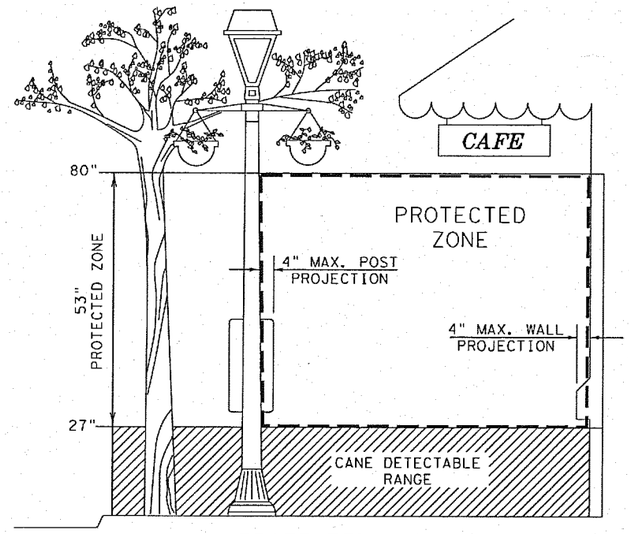

PROTECTED ZONE

In pedestrian circulation area, maximum 4" projection for post or wall mounted objects between 27"and 80" above the surface.

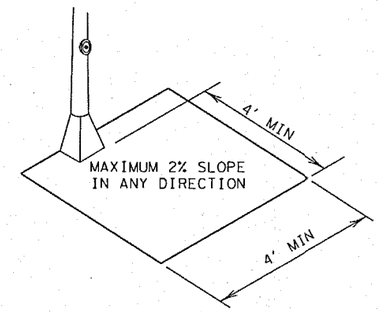

CLEAR GROUND SPACE ADJACENT TO PEDESTRIAN PUSH BUTTON

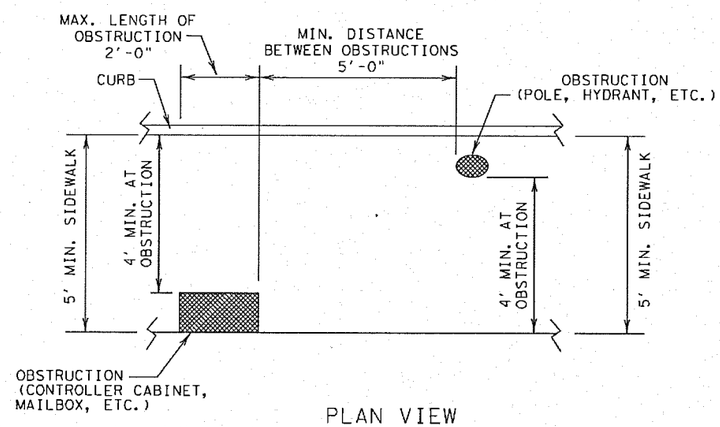

PLAN VIEW

PLACEMENT OF STREET FIXTURES

(ITEMS NOT INTENDED FOR PUBLIC USE. MINIMUM 4' x 4' CLEAR GROUND SPACE REQUIRED AT PUBLIC USE FIXTURES.)

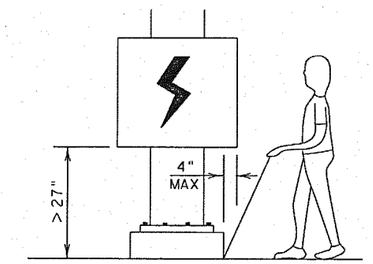

When an obstruction of a height greater than 27" from the surface would create a protrusion of more than 4" into the pedestrian circulation area, construct additional curb or foundation at the bottom to provide a maximum 4" overhang.

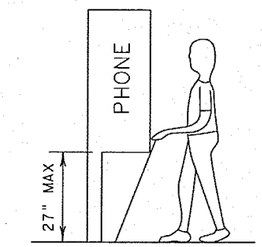

Protruding objects of a height ≤ 27" are detectable by cane and do not require additional treatment.

DETECTION BARRIER FOR VERTICAL CLEARANCE < 80"

SHEET 3 OF 4

Texas Department of Transportation
Design Division Standard

PEDESTRIAN FACILITIES CURB RAMPS

PED-12A

FILE: ped12A.dgn	DN: TxDOT	CK: PK	DW: TxDOT	CK: HD
©TxDOT March 2002	CONT	SECT	JOB	HIGHWAY
REVISIONS VP June 13, 2012	0364	03	095	SH-121
	DIST		COUNTY	SHEET NO.
	DAL		DENTON	190

DATE:
FILE:

FILE NAME: J:\COLORADO\SH-121\CADD\SHEETS\DETAILS\184-PED.DWG
SHEET SIZE: 11" X 17" 1' = 1'

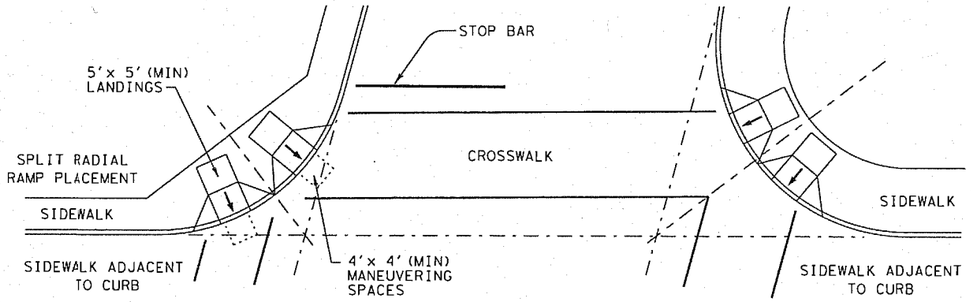

SKEWED INTERSECTION WITH "LARGE" RADIUS

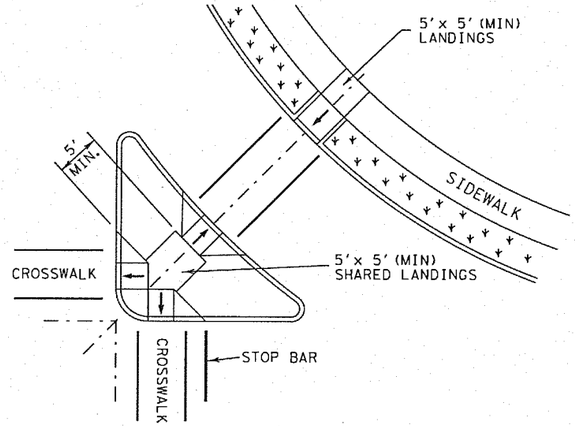

AT INTERSECTION
W/FREE RIGHT TURN & ISLAND

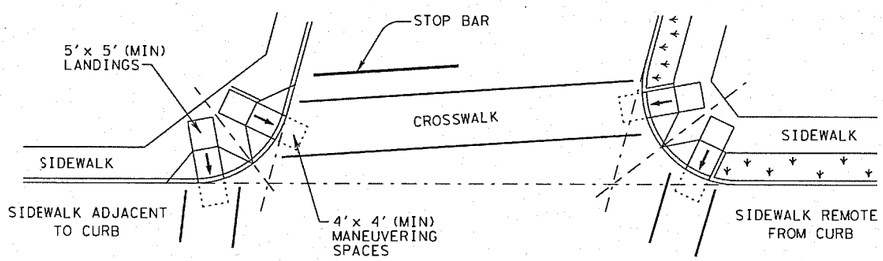

SKEWED INTERSECTION WITH "SMALL" RADIUS

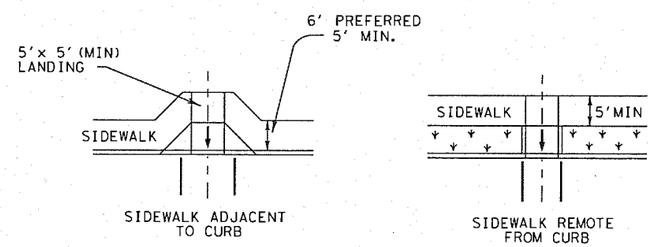

MID-BLOCK PLACEMENT
PERPENDICULAR RAMPS

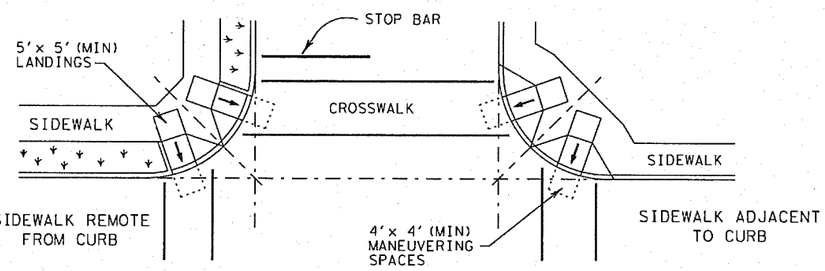

NORMAL INTERSECTION WITH "SMALL" RADIUS

TYPICAL CROSSING LAYOUTS

SHEET 4 OF 4

Texas Department of Transportation
Design Division Standard

PEDESTRIAN FACILITIES CURB RAMPS

PED-12A

FILE: ped12A.dgn	DN: TxDOT	CK: PK	DW: TxDOT	CK: HD	
© TxDOT March 2002	CONT	SECT	JOB	HIGHWAY	
REVISIONS	0364	03	095	SH-121	
VP June 13, 2012	DIST		COUNTY		SHEET NO.
	DAL		DENTON		191

DISCLAIMER:
The use of this standard is governed by the "Texas Engineering Practice Act". No warranty of any kind is made by TxDOT for any purpose whatsoever. TxDOT assumes no responsibility for the conversion of this standard to other formats or for incorrect results or damages resulting from its use.

DATE:
FILE:

FILE NAME: J:\COLORADO\SH-121\CAD\SHEETS\DETAILS\1B4-PED.DWG
SHEET SIZE: 11" X 17" 1' = 1'

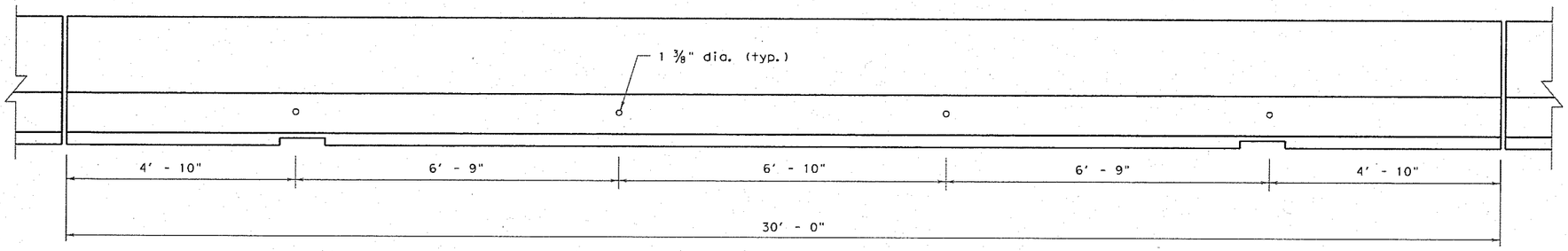

DETAIL 1

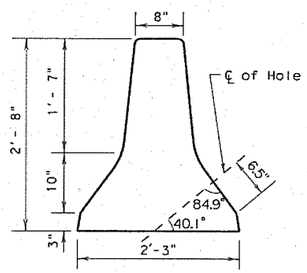

DETAIL 2

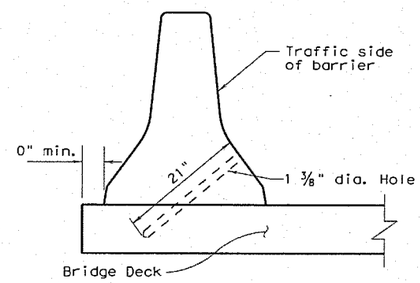

DETAIL 3

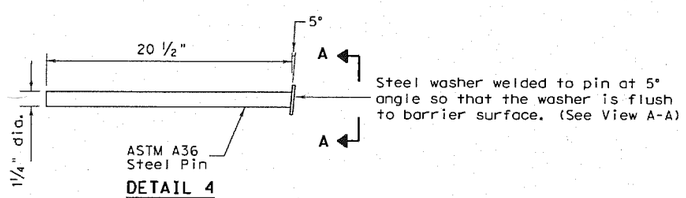

DETAIL 4

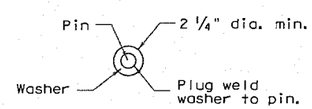

VIEW A-A

GENERAL NOTES

1. These details provide a method of laterally restraining precast concrete barrier to limit deflections under normally expected passenger vehicle impacts. These details are intended for use in work zones, primarily on bridge decks, where temporary barrier must be placed less then 2 ft. from the longitudinal edge of the deck or dropoff and parallel to the direction of travel. See Texas Transportation Institute Research Study 2-8-93-1959 for additional development information.

2. Each precast concrete barrier section shall have four 1 ⅜ in. diameter holes drilled completely through the barrier. The center lines of the holes are as shown in Detail 2. As shown, the entry point of the hole is located 6 ½ in. along the face of the barrier up from the first break. If the drill bit encounters a rebar in the barrier, the entry point may be shifted 6 in.± longitudinally along the barrier. The four holes are spaced along the lenth of the barrier as shown in Detail 1.

3. The drilling of bridge deck is accomplished by placing the predrilled barrier section on the bridge deck in the desired position, then the hole is drilled into the bridge deck with the bit passing though the hole in the barrier. The bit is to be inserted into the hole in the barrier to a total of 21 in. so that the bridge deck is drilled to a point which is slightly more than 5 in.± below the surface of the bridge deck depending upon the slope of the deck as shown in Detail 3.

4. The barrier section is secured in place by inserting the four 1 ¼ in. diameter steel pins which are 20 ½ in. long through the barrier section and into the deck. Detail 4 presents a sketch of the steel pins. Note that steel washers have been welded to the top of the steel pins to aid in removal of the pins when the barrier is to be moved.

5. These details may be used with precast barrier joint Type A, B, angle or channel connections.

6. The drilling of holes in the barrier, drilling of holes in bridge deck, fabrication and materials for the 1 ¼ in. pins, installation of pins, and any repair to bridge deck or barrier shall be considered as subsidary to the barrier bid items.

7. The barrier and new bridge deck will be repaired as directed by the Engineer with non-shrinkage grout.

8. A core drilling method approved by the Engineer will be required.

NOTE:
BARRIER FROM EXISTING STOCKPILES THAT SUBSTANTIALLY MEETS THE REQUIREMENTS SHOWN ON THIS SHEET MAY BE USED ON THIS PROJECT.

NEW BARRIER SHALL NOT BE CAST ACCORDING TO THE DETAILS SHOWN ON THIS SHEET.

R = Radius
D = Diameter

Texas Department of Transportation
Design Division (Roadway)

PRECAST CONCRETE TRAFFIC BARRIER TYPE 2

PCTB(3)-04

FILE: pctb304.dgn	DN: MAM	CK: MAM	DW: BGD	CK:	NEG:	
© TxDOT April 1994	DIST	FEDERAL AID PROJECT				SHEET
REVISIONS	DAL					192
	COUNTY		CONTROL	SECT	JOB	HIGHWAY
	DENTON		0364	03	095	SH-121

DISCLAIMER:
The use of this standard is governed by the "Texas Engineering Practice Act". No warranty of any kind is made by TxDOT for any purpose whatsoever. TxDOT assumes no responsibility for the conversion of this standard to other formats or for incorrect results or damages resulting from its use.

LEVELS DISPLAYED

FILE NAME: J:\COLONY\SH-121\CAD\SHEETS\DETAILS\193-PCTB.DWG
SHEET SIZE: 11" X 17" 1" = 1'

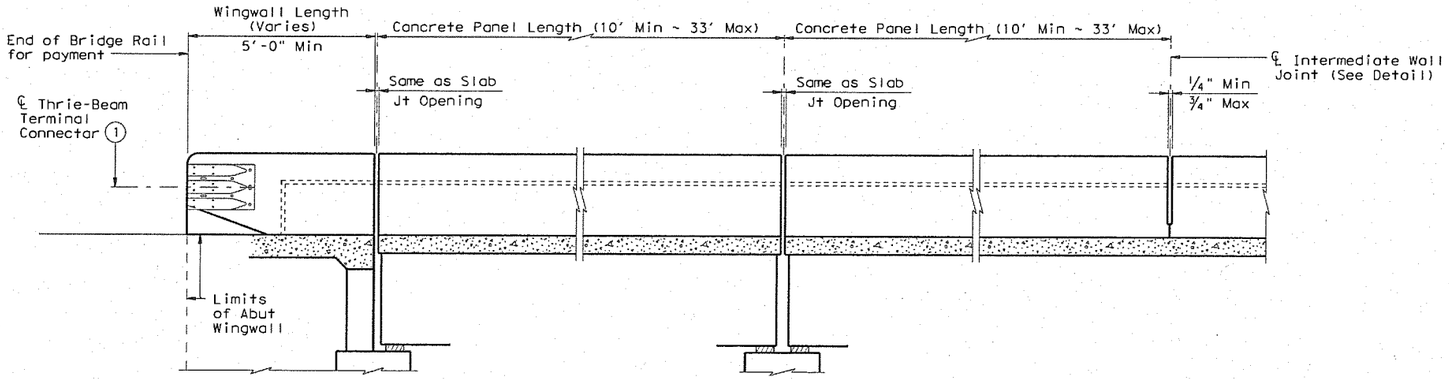

AT ABUTMENT BENTS

AT SLAB EXP JOINTS

AT INTERMEDIATE WALL JOINTS

ROADWAY ELEVATION OF RAIL

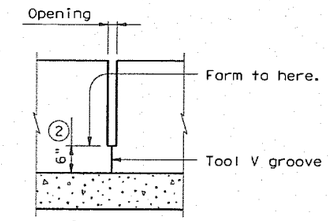

INTERMEDIATE WALL JOINT DETAIL

Provide at all interior bents without slab expansion joints. Space equally in between at 33' Max, 10' Min.

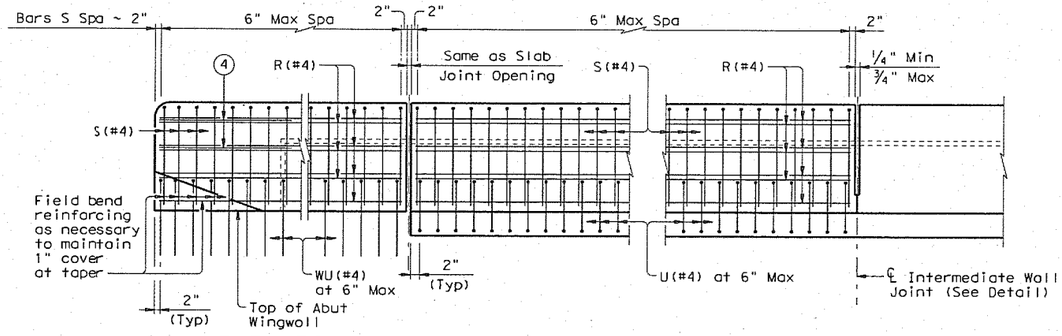

ELEVATION SHOWING TYPICAL REINFORCING PLACEMENT

℄ 5 ~ 7/8" Dia A325 Bolts with two 1 3/4" O.D. washers. Place washer under each head and nut. The 5 Terminal Connection Bolts must be tightened in a well distributed pattern so to prevent damage or distortion of the Thrie-Beam Connection and the MBGF Transition. Bolts must be cut off after installation so as to extend no more than 3/4" beyond nut. End of cut-off bolt must be painted with Zinc-rich paint. (1)

℄ 5 ~ 1" Dia holes and 2 1/2" Dia x 2" deep recesses. Holes and recesses must be formed or cored. Percussion drilling is not permitted. Adjust placement of reinforcing steel as necessary to avoid bolt holes and recesses. (5)

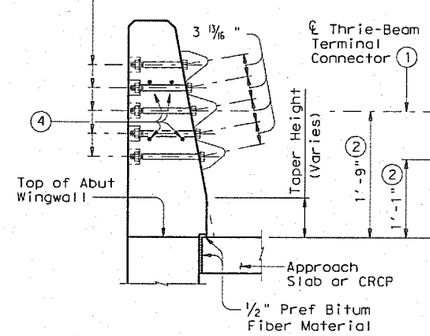

SECTION

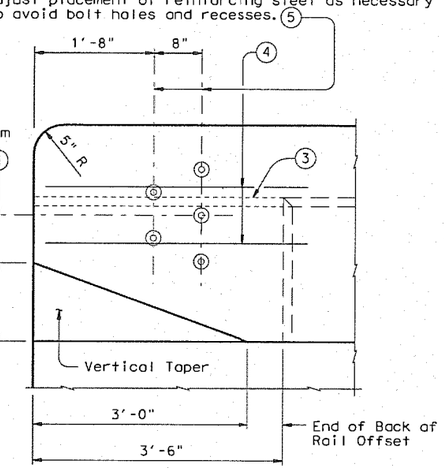

ELEVATION

TERMINAL CONNECTION DETAILS

(1) Terminal Connectors and associated hardware are to be paid for under the Item "Metal Beam Guard Fence". Metal Beam Guard Fence Transitions must be attached to the bridge rail and extended along the embankment unless otherwise shown in the plans.

(2) Increase 2" for structures with Overlay.

(3) Back of rail offset may, with Engineer's approval be continued to the end of the railing.

(4) 4 additional Bars R(#4) 3'-8" in length must be placed inside Bars S(#4) and centered 2'-0" from end of rail when Terminal Connections are required.

(5) Bolt recesses are only required when pedestrian sidewalks are adjacent to back of rail.

DISCLAIMER:
The use of this standard is governed by the "Texas Engineering Practice Act". No warranty of any kind is made by TxDOT for any purpose whatsoever. TxDOT assumes no responsibility for the conversion of this standard to other formats or for incorrect results or damages resulting from its use.

LEVELS DISPLAYED

PATH:

FILE NAME: J:\COLONY\SH-121\CAD\SHEETS\DETAILS\193-SSTR.DWG
SHEET SIZE: 11" X 17" 1" = 1'

SHEET 1 OF 2

Texas Department of Transportation
Bridge Division

TRAFFIC RAIL SINGLE SLOPE

TYPE SSTR

FILE: ristd014.dgn	DN: TxDOT	CK: TxDOT	DW: JTR		CK: TxDOT
© TxDOT April 2009	DISTRICT	FEDERAL AID PROJECT			SHEET
REVISIONS 05-11: Gen Notes; Wall Joint Note. 07-12: Guardrail Transition.	DAL				193
	COUNTY		CONTROL	SECT	JOB	HIGHWAY
	DENTON		0364	03	095	SH-121

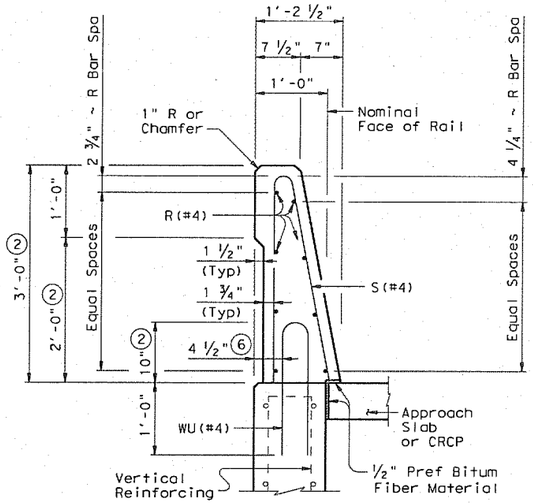

ON ABUTMENT WINGWALLS OR CIP RETAINING WALLS

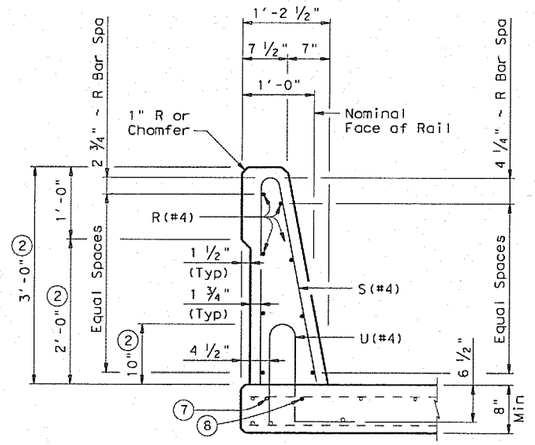

ON BRIDGE SLAB

SECTIONS THRU RAIL

(2) Increase 2" for structures with Overlay.

(6) 5 1/2" when vertical reinforcing has closer clear cover over horizontal reinforcing in abutment wingwalls or retaining walls on traffic side of wall.

(7) As an aid in supporting reinforcement, additional longitudinal bars may be used in the slab with the approval of the Engineer. Such bars must be furnished at the Contractors expense.

(8) Top longitudinal slab bar may be adjusted laterally 3" plus or minus to tie reinforcing.

(9) No longitudinal wires may be within upper bend.

(10) Bend or cut as required to clear drain slots.

(11) Space U(#4) bars at 4" Max when end region of panel length is less than 6'-0" to side slot drain. Space U(#4) bars at 6" Max when end region of panel length is 6'-0" and greater to side slot drain.

CONSTRUCTION NOTES:

This railing may be constructed with slip-forms when approved by the Engineer, with equipment approved by the Engineer. Sensor control for both line and grade must be provided. Tack welding to provide bracing for slip-form operations is acceptable. Welding can be performed at a minimum spacing of 3 ft between the cage and the anchorage. It is permissible to weld to U, WU and S bars at any location on the cage. If increased bracing is needed, additional anchorage devices must be added and welding must be performed in the upper two thirds of the cage.

The back of railing must be vertical unless otherwise shown in the plans or approved by the Engineer.

MATERIAL NOTES:

All steel components except reinforcing must be galvanized unless otherwise shown in plans.

Use Class "C" concrete. Use Class "C" (HPC) if required elsewhere.

All reinforcing steel must be grade 60.

Epoxy coat all rail reinforcement if slab bars are epoxy coated.

Deformed welded wire reinforcement (WWR) may be used as an option to conventional reinforcement and must be made in accordance with ASTM A497 (Deformed Wire). Combinations of Reinforcing Steel and WWR or configurations of WWR other than shown will be permitted when the conditions in the table are satisfied.

GENERAL NOTES:

This rail has been successfully evaluated by full-scale crash test to meet MASH TL-4 criteria. This rail can be used for design speeds of 50 mph and greater when a TL-3 rated guard fence transition is used. When a TL-2 rated guard fence transition is used, this rail can only be used for design speeds of 45 mph and less.

This railing cannot be used on bridges with expansion joints providing more than 5" movement.

Rail anchorage details shown on this standard may require modification for select structure types. See appropriate details elsewhere in plans for these modifications.

Shop drawings will not be required for this rail.

Average weight of railing with no overlay is 376 plf.

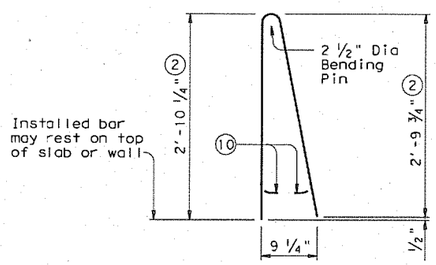

BARS S (#4)

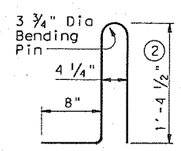

BARS U (#4)

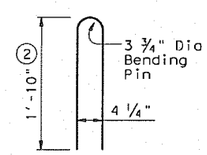

BARS WU (#4)

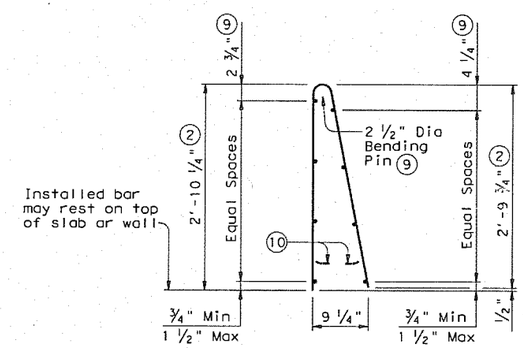

OPTIONAL WELDED WIRE REINFORCEMENT (WWR)

DESCRIPTION	LONGITUDINAL WIRES	VERTICAL WIRES
Minimum (Cumulative Total) Wire Area	1.067 Sq In.	0.267 Sq In. per Ft
	No. of Wires	Spacing
Minimum	8	4"
Maximum	10	8"
Maximum Wire Size Differential	The smaller wire must have an area of 40% or more of the larger wire.	

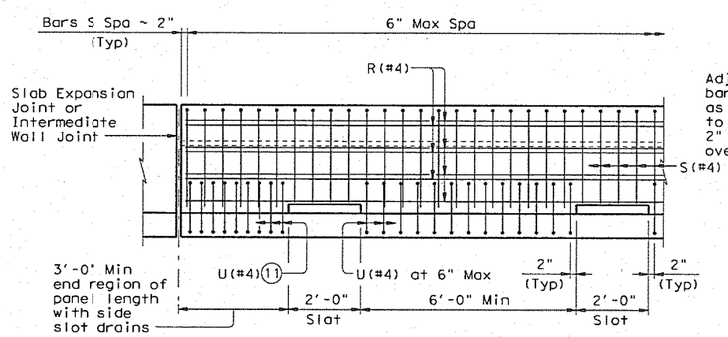

OPTIONAL SIDE SLOT DRAIN DETAIL

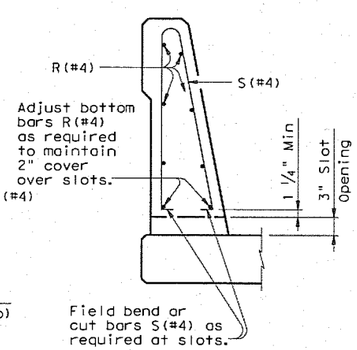

SECTION THRU OPTIONAL SIDE SLOT DRAIN

Note: Side Slot Drains may be used where shown elsewhere on the plans or as directed by the Engineer. Drains should not be placed over railroad tracks, lower roadways, or sidewalks. When this rail is used as a separator between a roadway surface and a sidewalk surface, side drain slots will not be permitted.

DISCLAIMER:
The use of this standard is governed by the "Texas Engineering Practice Act". No warranty of any kind is made by TxDOT for any purpose whatsoever. TxDOT assumes no responsibility for the conversion of this standard to other formats or for incorrect results or damages resulting from its use.

PATH:

LEVELS DISPLAYED

FILE NAME: J:\COLONY\SH-121\CAD\SHEETS\DETAILS\103-SSTR.DWG
SHEET SIZE: 11" X 17" 1' = 1'

SHEET 2 OF 2

Texas Department of Transportation
Bridge Division

TRAFFIC RAIL SINGLE SLOPE

TYPE SSTR

FILE:	ristd014.dgn	DN: TxDOT	CK: TxDOT	DW: JTR	CK: TxDOT
© TxDOT April 2009		DISTRICT	FEDERAL AID PROJECT		SHEET
REVISIONS 05-11: Gen Notes; Wall Joint Note. 07-12: Guardrail Transition.		DAL			194
		COUNTY	CONTROL	SECT	JOB	HIGHWAY
		DENTON	0364	03	095	SH-121

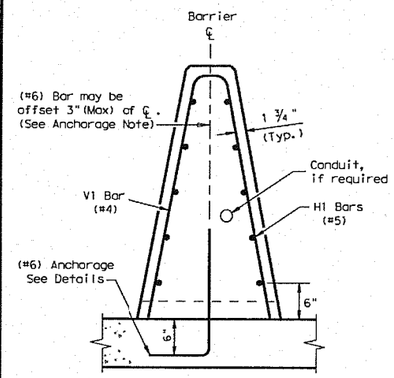

END VIEW

CAST-IN-PLACE (CIP) BARRIER

Barrier is Symmetrical About the Center Line

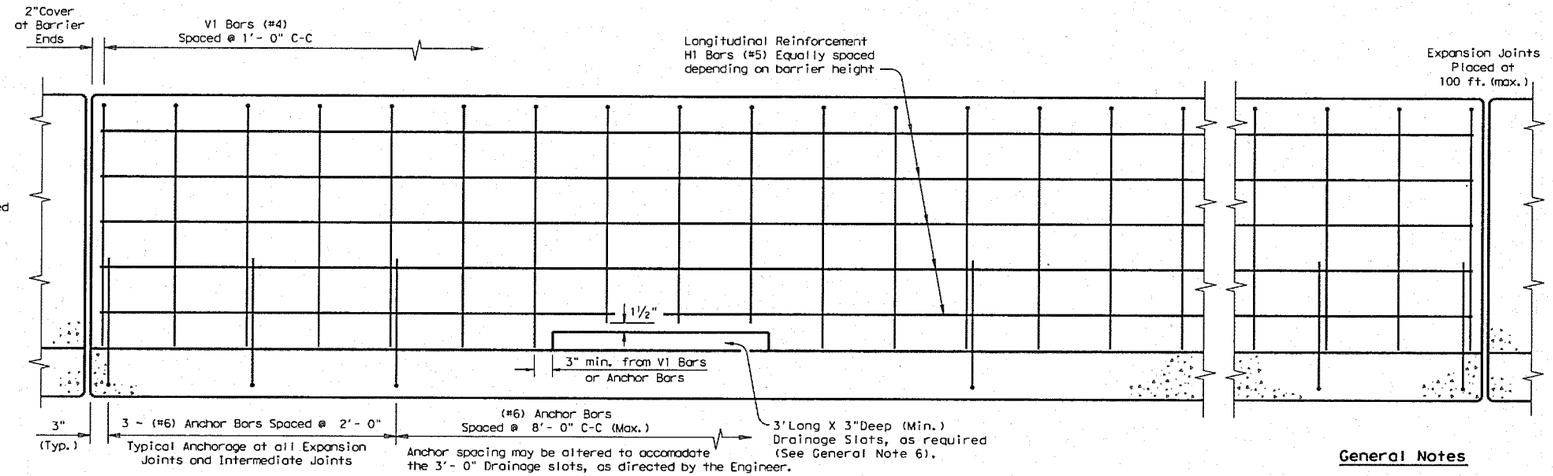

Note:
Reinforcement around the drainage slots may be cut or bent to accommodate the edge and top clearances.

The bottom of the reinforcement cage may rest on the top of the Concrete Bridge Deck or CRCP.

ELEVATION VIEW

Cast-in-Place (SSCB) on Bridge Decks or Continuously Reinforced Concrete Pavement (CRCP) (Showing Reinforcement and Anchor Placement)

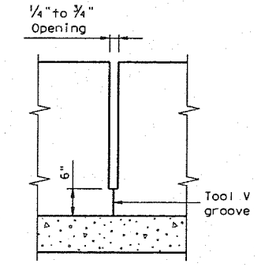

INTERMEDIATE JOINT DETAIL

Place at all Bent ℄'s, without expansion joints and spaced at 33 ft. (max), 10 ft. (min).

EXPANSION JOINT PLACEMENT

Place at all transverse joints or 100 ft. (max.), 10 ft. (min).

General Notes

1. Concrete shall be Class C. Unless otherwise specified in the plans.
2. Where used, rebar reinforcement shall be Grade 60 and conform to ASTM A615.
   If the bridge slab requires epoxy "coated" reinforcement, the barrier and/or anchorage may require the same, if shown elsewhere in the plans.
3. These details cover barrier per Item 514, "Permanent Concrete Traffic Barrier".
4. Anchorage: The "Optional" Epoxy Anchor system shall be embedded 6" with a Type III, Class C Epoxy anchorage system. Follow the manufacturer's directions for installing the epoxied anchor bars. All anchorage shown is the minimum required, and considered subsidiary to the bid item.
5. Top edges of CIP barrier shall have a ¾" chamfer or tooled radius.
6. Drainage slot locations (12'- 0", C-C Min. Spacing) are shown elsewhere, or as directed by the Engineer. Drainage slot heights on the SSCB may be increased to a maximum of 5 inches, without geometric changes to the barrier face.
7. Cast-in-place barrier may be slip formed. Bracing may be tied or tack welded to the reinforcement cage to provide cage stability. Do not weld to anchor bars. The reinforcement cage may rest on the top of the finished grade.
8. For locations where lighting is required, see the SSCB(4) sheet for the proper reinforcement and anchorage.

Top edges of CIP barrier shall have a ¾" chamfer or tooled radius.

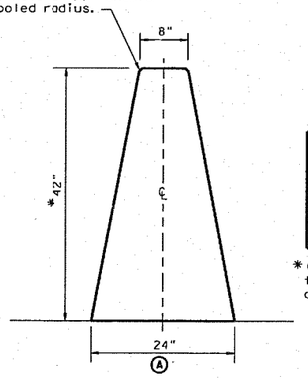

* Barrier height (IN.)	Dimensions (IN.)		
	Ⓐ	Ⓑ	Ⓒ
42	24	40 ¼	20 ½
48	26 ¼	46 ¼	22 ¾
54	28 ½	52 ¼	25 ⅙

*(SSCB)(42") Barrier height may be increased to 48" or 54". This would increase the barrier and reinforcement dimensions accordingly.

SINGLE SLOPE CONCRETE BARRIER

(SSCB)(42")

BARRIER PLACEMENT OVER (CRCP) JOINTS

Barrier may be cast over a "Longitudinal" CRCP joint.

CRCP Joints (with or without tiebars): Two layers of 30# roofing felt or ½" preformed bituminous fiber material.

Barrier Anchorage Note: Anchorage must be located at least 3" from a longitudinal joint.

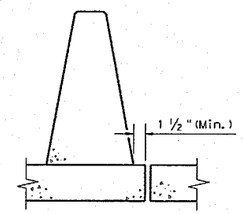

MINIMUM EDGE DISTANCE FROM LONGITUDINAL JOINT

Barrier placement over a longitudinal bridge joint is not recommended.

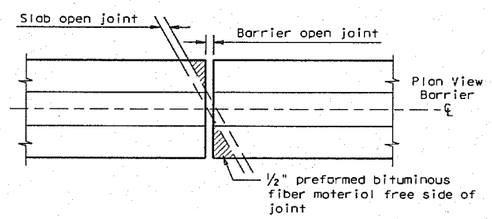

BARRIER OVER TRANSVERSE OPEN JOINT

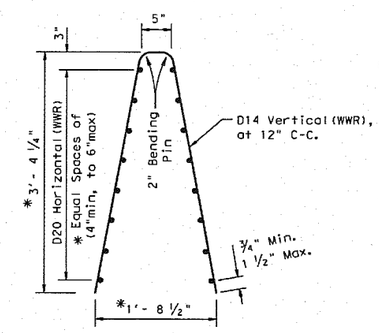

Welded Wire Reinforcement (WWR) Option for Bars V1 and H1

(WWR) General Notes

1. Deformed Welded Wire Reinforcement (WWR) shall conform to ASTM A497.
2. Welded wire cage may be cut and bent to accommodate the drainage slots, as directed by the Engineer.
3. Welded wire splice locations shall have a "minimum" splice lap length of 12".
4. Combinations of reinforcing steel and WWR will be permitted, as directed by the Engineer. The dimension from the end of the barrier section to the first wire shall not exceed 3".

Cast-In-Place (CIP) or Slip-Formed (SSCB)

Cast-in-Place barrier may be connected to precast SSCB. Joint connection "Types" may be used in Cast-in-Place barrier, to match the precast barrier connection. (See required connection "Type" elsewhere in the plans)

The weight of Cast-in-Place (SSCB)42" is approx. 717 lbs per ft.

Standard Anchorage Note:
10" leg may be oriented 90 degrees in any direction about the barrier ℄.

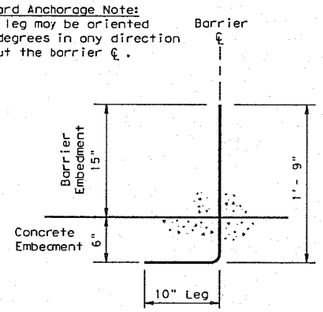

STANDARD ANCHORAGE

(#6) Bar
Concrete Pavement / Bridge Deck Anchorage:
Cast-in-Place or Slip-Formed Barrier
(See General Notes 2)

Epoxy Note:
If epoxy coated anchor bars are required, the lower 6" of the bars must not be epoxy coated.

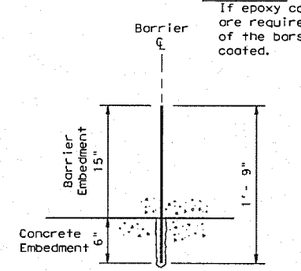

"OPTIONAL" EPOXY ANCHORAGE

(#6) Bar
Type III, Class C Epoxy
Concrete Pavement / Bridge Deck Anchorage:
Cast-in-Place or Slip-Formed Barrier
(See General Notes 2 and 4)

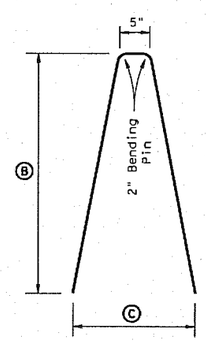

V1 Bar

#4 Bar

Texas Department of Transportation
Design Division Standard

SINGLE SLOPE CONCRETE BARRIER

CAST-IN-PLACE
(TYPE 1)
(BRIDGE DECK or CRCP)

SSCB(1)-10

FILE: sscb110.dgn	DN: TxDOT	CK: AM	DW: BD	CK:
© TxDOT December 2010	CONT	SECT	JOB	HIGHWAY
REVISIONS	0364	03	095	SH-121
	DIST		COUNTY	SHEET NO.
	DAL		DENTON	195

DISCLAIMER:
The use of this standard is governed by the "Texas Engineering Practice Act". No warranty of any kind is made by TxDOT for any purpose whatsoever. TxDOT assumes no responsibility for the conversion of this standard to other formats or for incorrect results or damages resulting from its use.

DATE:
FILE:

FILE NAME: A:\COLONY\SH-121\CADD\SHEETS\DETAILS\178-BARRIERS.DWG
SHEET SIZE: 11" X 17" 1" = 1'

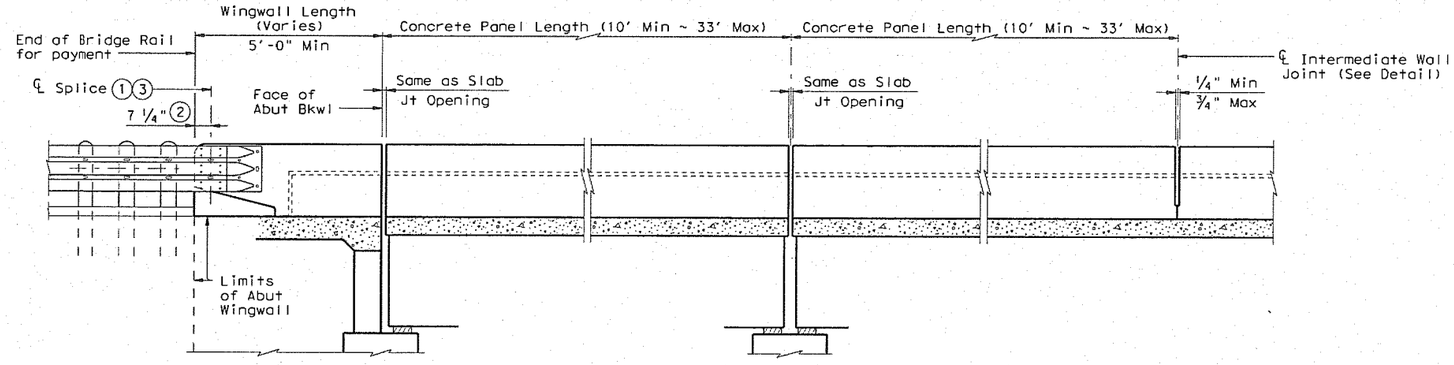

AT ABUTMENT BENTS
Showing TL-3 Transition

AT SLAB EXP JOINTS

AT INTERMEDIATE WALL JOINTS

ROADWAY ELEVATION OF RAIL

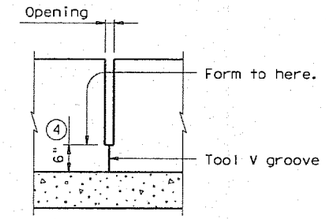

INTERMEDIATE WALL JOINT DETAIL

Provide at all interior bents without slab expansion joints. Space equally in between at 33' Max, 10' Min.

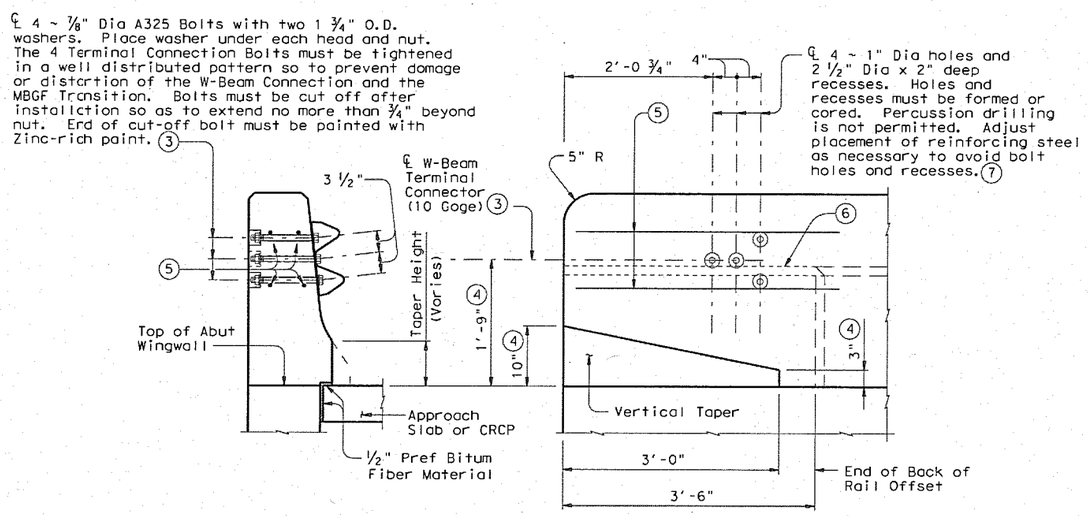

SECTION

ELEVATION

TL-2 TERMINAL CONNECTION DETAILS

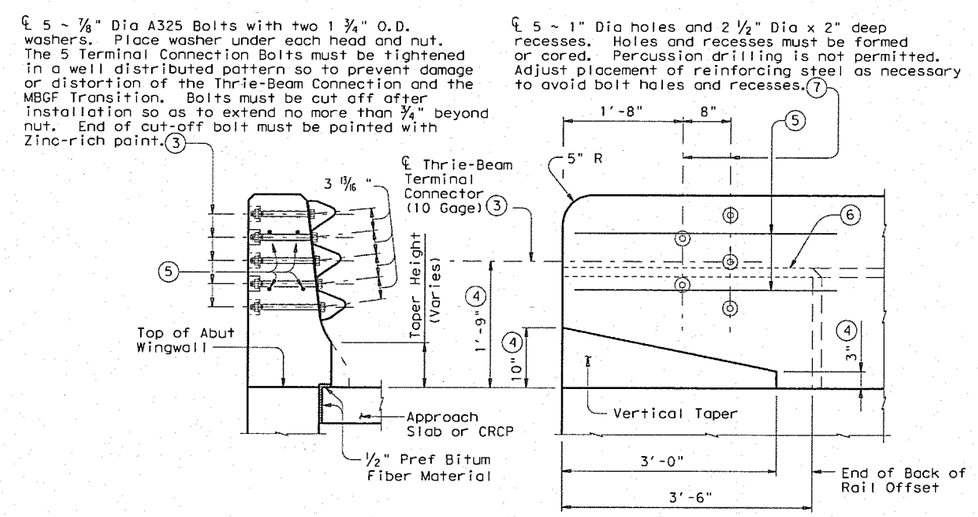

SECTION

ELEVATION

TL-3 TERMINAL CONNECTION DETAILS

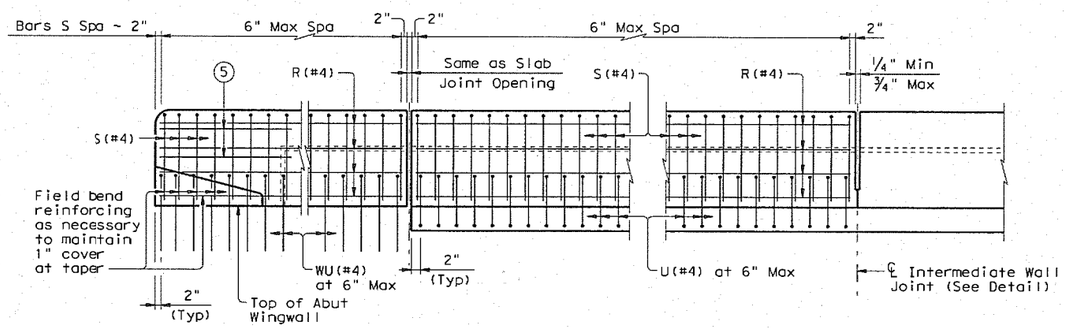

ELEVATION SHOWING TYPICAL REINFORCING PLACEMENT

(1) Metal Beam Guard Fence Transitions must be attached to the bridge rail and extended along the embankment unless otherwise shown in the plans.

(2) Showing TL-3 Splice location, TL-2 Splice location is 1'-0".

(3) Terminal Connectors and associated hardware are to be paid for under the Item "Metal Beam Guard Fence".

(4) Increase 2" for structures with ACP Overlay.

(5) 4 additional Bars R(#4) 3'-8" in length must be placed inside Bars S(#4) and centered 2'-0" from end of rail when Terminal Connections are required.

(6) Back of rail offset may, with Engineer's approval be continued to the end of the railing.

(7) Bolt recesses are only required when pedestrian sidewalks are adjacent to back of rail.

DISCLAIMER:
The use of this standard is governed by the "Texas Engineering Practice Act". No warranty of any kind is made by TxDOT for any purpose whatsoever. TxDOT assumes no responsibility for the conversion of this standard to other formats or for incorrect results or damages resulting from its use.

PATH:

LEVELS DISPLAYED

FILE NAME: J:\COLONY\SH-121\CAD\SHEETS\DETAILS\196-T551.DWG
SHEET SIZE: 11" X 17" 1" = 1'

SHEET 1 OF 2

Texas Department of Transportation
Bridge Division

TRAFFIC RAIL

TYPE T551

FILE: ristd009.dgn	DN: TxDOT	CK: TxDOT	DW: JTR	CK: TxDOT	
© TxDOT April 2009	DISTRICT	FEDERAL AID PROJECT			SHEET
REVISIONS	DAL				196
05-11: Wall Joint Note.	COUNTY		CONTROL	SECT	JOB	HIGHWAY
	DENTON		0364	03	095	SH121

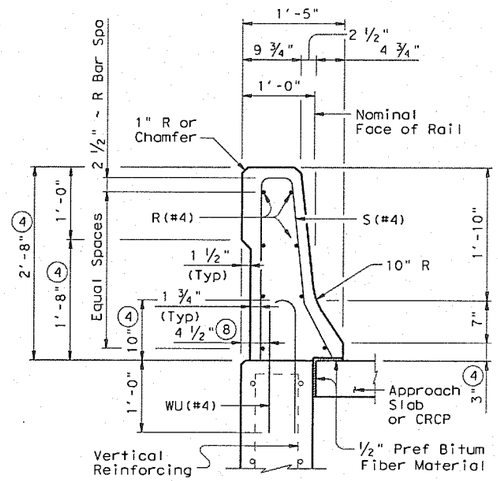

ON ABUTMENT WINGWALLS OR CIP RETAINING WALLS

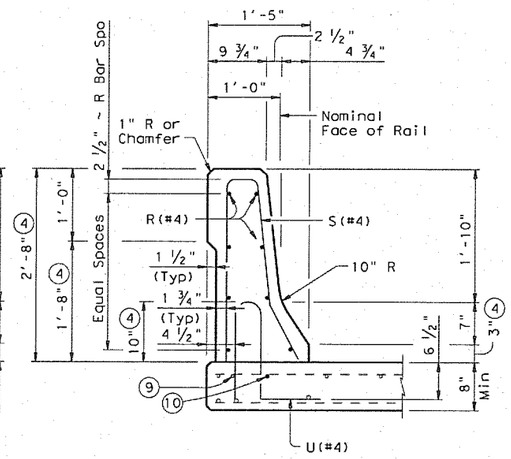

ON BRIDGE SLAB

SECTIONS THRU RAIL

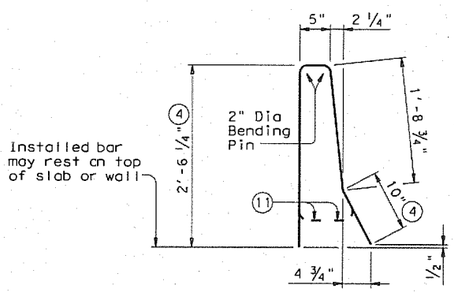

BARS S (#4)

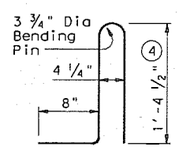

BARS U (#4)

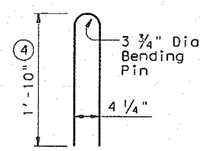

BARS WU (#4)

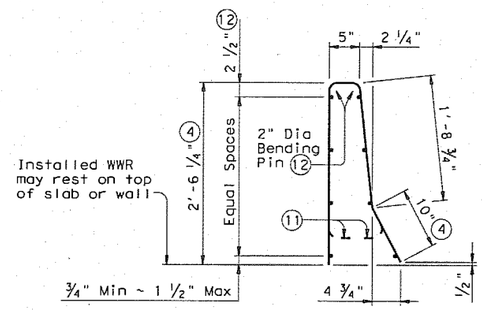

OPTIONAL WELDED WIRE REINFORCEMENT (WWR)

DESCRIPTION	LONGITUDINAL WIRES	VERTICAL WIRES
Minimum (Cumulative Total) Wire Area	1.067 Sq In.	0.267 Sq In. per Ft
	No. of Wires	Spacing
Minimum	8	4"
Maximum	10	8"
Maximum Wire Size Differential	The smaller wire must have an area of 40% or more of the larger wire.	

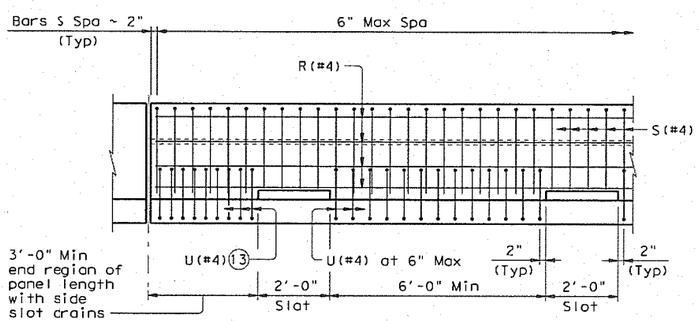

OPTIONAL SIDE SLOT DRAIN DETAIL

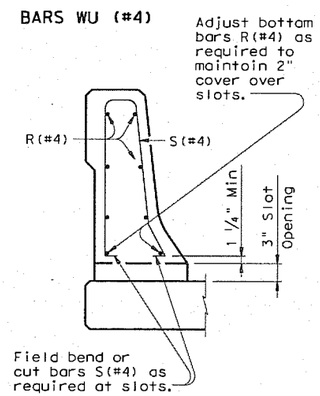

SECTION THRU OPTIONAL SIDE SLOT DRAIN

Note: Side Slot Drains may be used where shown elsewhere on the plans or as directed by the Engineer. If continuous slots at 8 ft c-c are required, then details as on standard Type T552 should apply. Drains should not be placed over railroad tracks, lower roadways, or sidewalks. When this rail is used as a separator between a roadway surface and a sidewalk surface, side drain slots will not be permitted.

(4) Increase 2" for structures with ACP Overlay.

(8) 5 ½" when vertical reinforcing has closer clear cover over horizontal reinforcing in abutment wingwalls or retaining walls on traffic side of wall.

(9) As an aid in supporting reinforcement, additional longitudinal bars may be used in the slab with the approval of the Engineer. Such bars will be furnished at the Contractors expense.

(10) Top longitudinal slab bar may be adjusted laterally 3" plus or minus to tie reinforcing.

(11) Bend or cut as required to clear drain slots.

(12) No longitudinal wires may be in top center of cage.

(13) Space U(#4) bars at 4" Max when end region of panel length is less than 6'-0" to side slot drain. Space U(#4) bars at 6" Max when end region of panel length is 6'-0" and greater to side slot drain.

CONSTRUCTION NOTES:

This railing may be constructed with slip-forms when approved by the Engineer, with equipment approved by the Engineer. Sensor control for both line and grade must be provided. Tack welding to provide bracing for slip-form operations is acceptable. Welding can be performed at a minimum spacing of 3 ft between the cage and the anchorage. It is permissible to weld to U, WU and S bars at any location on the cage. If increased bracing is needed, additional anchorage devices must be added and welding must be performed in the upper two thirds of the cage.

The back of railing must be vertical unless otherwise shown on the plans or approved by the Engineer.

MATERIAL NOTES:

All steel components except reinforcing must be galvanized unless otherwise shown on plans.

Use Class "C" concrete. Use Class "C" (HPC) if required elsewhere.

All reinforcing steel must be Grade 60.

Epoxy coat all rail reinforcement if slab bars are epoxy coated.

Deformed welded wire reinforcement (WWR) may be used as an option to conventional reinforcement and must be made in accordance with ASTM A497 (Deformed Wire). Combinations of Reinforcing Steel and WWR or configurations of WWR other than shown will be permitted when the conditions in the table are satisfied.

GENERAL NOTES:

This rail has been evaluated and approved to be of equal strength to railings with like geometry, which have been crash tested to meet NCHRP Report 350 TL-4 criteria. This rail can be used for design speeds of 50 mph and greater when a TL-3 rated guard fence transition is used. When a TL-2 rated guard fence transition is used, this rail can only be used for design speeds of 45 mph and less.

This railing cannot be used on bridges with expansion joints providing more than 5" movement.

Rail anchorage details shown on this standard may require modification for select structure types. See appropriate details elsewhere in plans for these modifications.

Shop drawings will not be required for this rail.

Average weight of railing with no overlay is 382 plf.

DISCLAIMER:
Act: The use of this standard is governed by the "Texas Engineering Practice Act". No warranty of any kind is made by TxDOT for any purpose whatsoever. TxDOT assumes no responsibility for the conversion of this standard to other formats or for incorrect results or damages resulting from its use.

PATH:

LEVELS DISPLAYED

FILE NAME: u:\coldwy\sh-121\cad\sheets\details\196-t551.dwg
SHEET SIZE: 11" X 17" 1" = 1"

SHEET 2 OF 2

Texas Department of Transportation
Bridge Division

TRAFFIC RAIL

TYPE T551

FILE: ristd009.dgn	DN: TxDOT	CK: TxDOT	DW: JTR	CK: TxDOT
© TxDOT April 2009	DISTRICT	FEDERAL AID PROJECT		SHEET
REVISIONS 05-11: Wall Joint Note.	DAL			197
	COUNTY	CONTROL	SECT	JOB	HIGHWAY
	DENTON	0364	03	095	SH121

DISCLAIMER
The use of this standard is governed by the "Texas Engineering Practice Act". No warranty of any kind is made by NTTA for any purpose whatsoever. NTTA assumes no responsibility for the conversion of this standard to other formats or for incorrect results or damages resulting from its use.

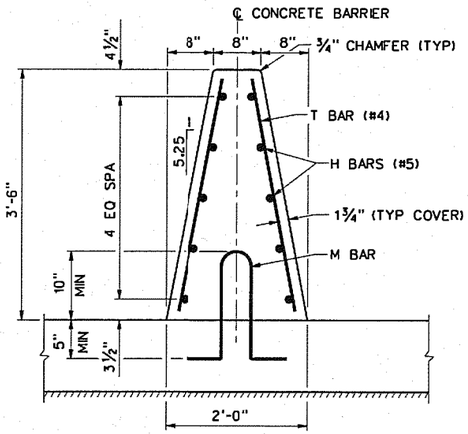

SECTION A-A

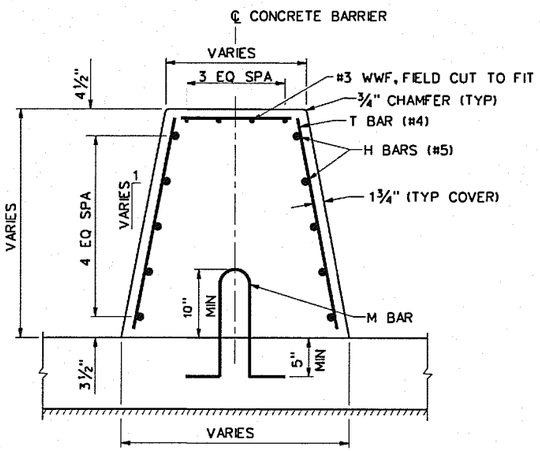

SECTION B-B

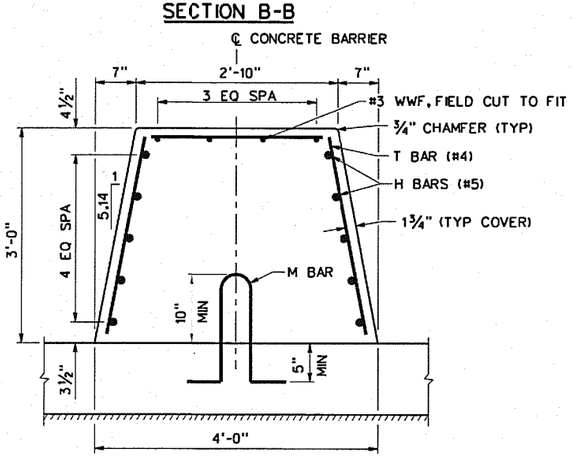

SECTION C-C

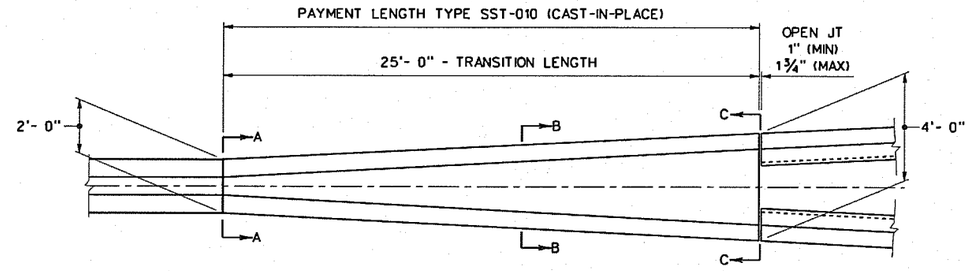

PLAN VIEW

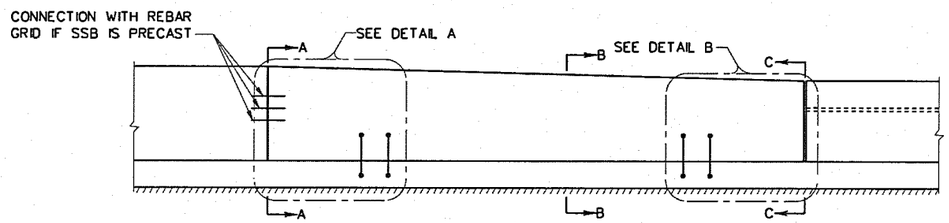

ELEVATION VIEW

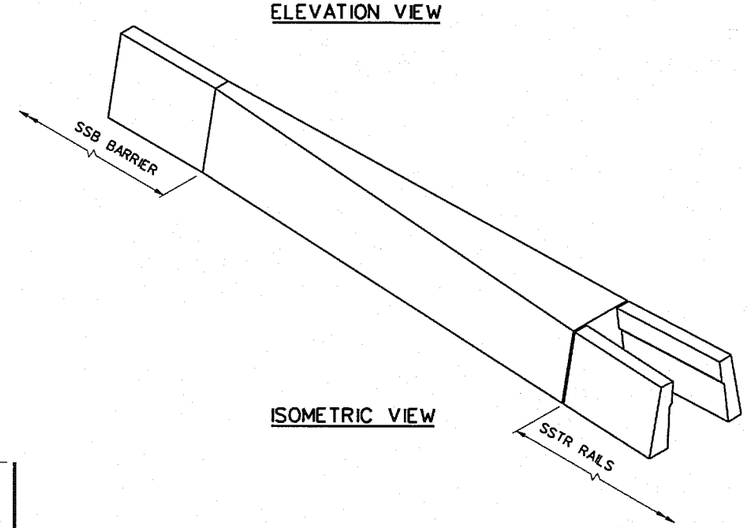

ISOMETRIC VIEW

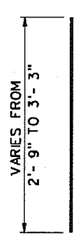

T BAR (#4)

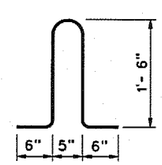

M BAR(#4)

REINFORCING DETAILS

GENERAL NOTES:
1. SINGLE SLOPE TRANSITION RAIL IS MEASURED BY THE LINEAR FOOT AND PAID FOR UNDER ITEM 450 "RAIL (TRANS)". BID PRICE SHALL INCLUDE ALL CONCRETE AND REINFORCEMENT.
2. CONNECTION WITH PRECAST SSB SHALL BE MADE WITH REBAR GRID AND SLOT AS SHOWN IN SSB-002.
3. CONCRETE SHALL BE CLASS C (F'C=3600 PSI). ALL REINFORCING STEEL SHALL BE ASTM A615, GRADE 60. DO NOT WELD TO M BARS.
4. SHOP DRAWINGS ARE NOT REQUIRED FOR THIS BARRIER.
5. CHAMFER TOP AND END EDGES ¾ INCH.

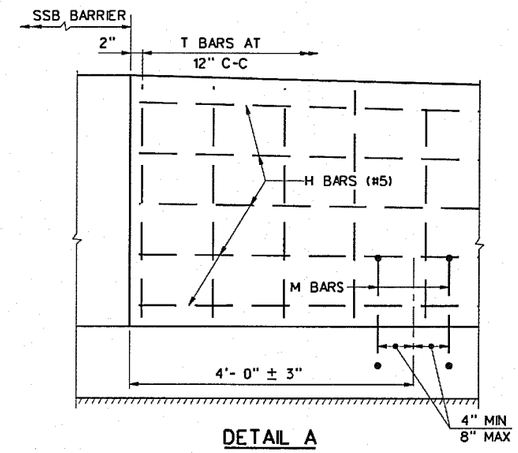

DETAIL A

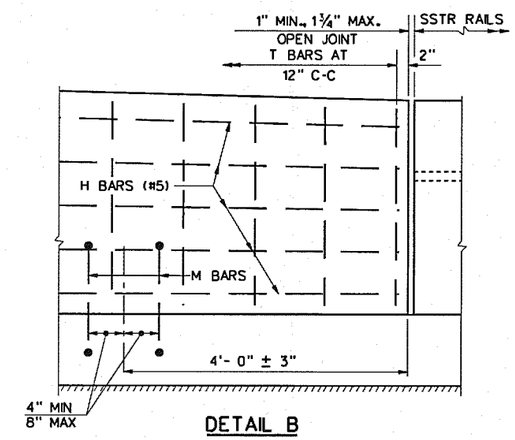

DETAIL B

STATE OF TEXAS
JOSEPH PERKINS
97522
LICENSED
PROFESSIONAL ENGINEER
4/30/13

NO.	DATE	REVISION	APPROV.	DRN.

NTTA®
NORTH TEXAS TOLLWAY AUTHORITY

SINGLE SLOPE TRANSITION SSB TO SSTR

SST-210-2010

DRAWN GC	DATE 02-15-10	DESIGNED GC	DATE 02-15-10
CHECKED MDB	DATE 02-15-10	SCALE NTS	

CONTRACT NO. _____ SHEET 198 OF ____

FILE NAME: J:\COLONY\SH-121\CAD\SHEETS\DETAILS\196-NTTA.DWG
SHEET SIZE: 11" X 17" 1" = 1'
1:41:39 PM 2/23/2010
G:\424361\NTTA STANDARDS AND SPECIFICATIONS\NTTA STANDARDS\NTTA FINALS\dgn\NTTA-SST-210.dgn

DISCLAIMER
The use of this standard is governed by the "Texas Engineering Practice Act". No warranty of any kind is made by NTTA for any purpose whatsoever. NTTA assumes no responsibility for the conversion of this standard to other formats or for incorrect results or damages resulting from its use.

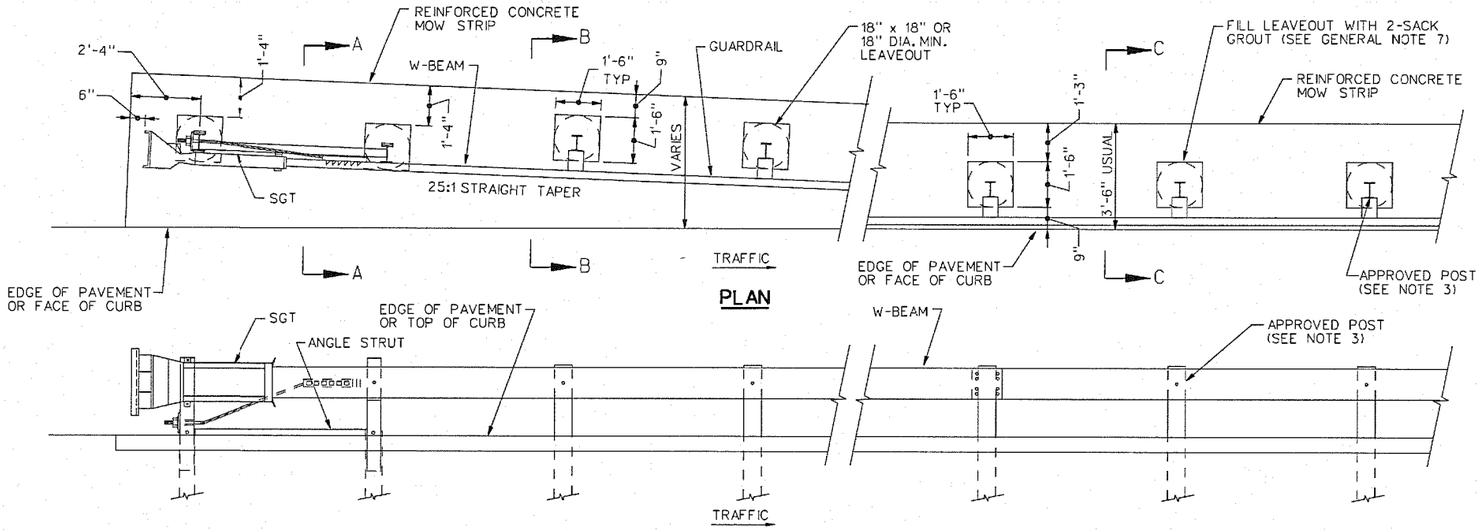

GENERAL NOTES:

1. MOW STRIPS SHALL BE CONCRETE RIPRAP AS SHOWN ON THE PLANS AND WILL BE PAID FOR UNDER ITEM 432 "RIPRAP" UNLESS OTHERWISE SPECIFIED. REINFORCED CONCRETE MOW STRIP SHALL BE PLACED IN ACCORDANCE WITH ITEM 432, "RIPRAP".
2. THE LEAVEOUT BEHIND THE POST SHALL BE A MINIMUM OF 7".
3. THE TYPE OF APPROVED POST WILL BE SHOWN ELSEWHERE IN THE PLANS. SEE THE APPLICABLE STANDARD SHEETS FOR ADDITIONAL DETAILS AND INFORMATION.
4. SGT HINGE TO BE CLEAR FROM THE TOP OF MOW STRIP FOR FUNCTIONALITY.
5. DEPTH OF MOW STRIP MAY VARY, (5" USUAL, 8" MAXIMUM).
6. THE LIMITS OF PAYMENT FOR CONCRETE RIPRAP WILL INCLUDE LEAVEOUTS FOR POST.
7. THE LEAVEOUTS SHALL BE FILLED WITH NO MORE THAN A 2-SACK GROUT MIXTURE AND PLACED IN ACCORDANCE WITH SECTION 421.2(8), "MORTAR AND GROUT". PAYMENT FOR FURNISHING AND PLACING THE GROUT MIXTURE WILL BE CONSIDERED SUBSIDIARY TO THE PAY ITEM OF CONCRETE RIPRAP.
8. OTHER CURB PLACEMENT OPTIONS MAY BE USED. CURBS ARE NOT CONSIDERED PART OF THE MOW STRIP AND WILL BE PAID UNDER OTHER PERTINENT BID ITEMS.
9. WHERE EDGE OF PAVEMENT IS ASPHALT, SAW CUT IS REQUIRED. THIS WORK SHALL BE CONSIDERED SUBSIDIARY TO RIPRAP ITEM.
10. SOUNDWALL MAY HAVE STRIATION. IN THIS CASE, CONTRACTOR SHALL ENSURE THAT THERE ARE NO GAPS AT THE STRIATIONS.

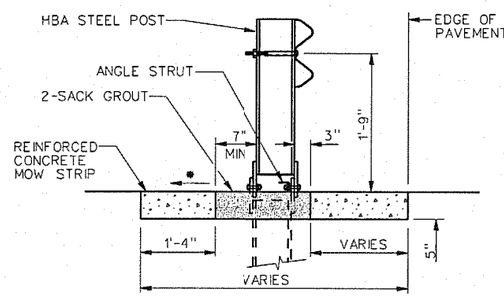

SECTION A-A
NOT TO SCALE

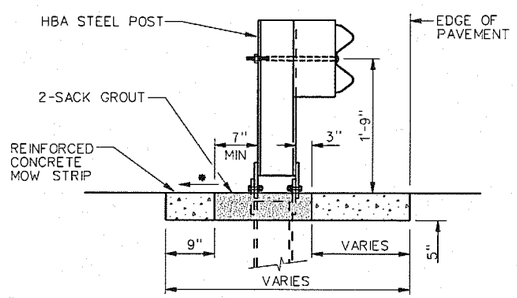

SECTION B-B
NOT TO SCALE

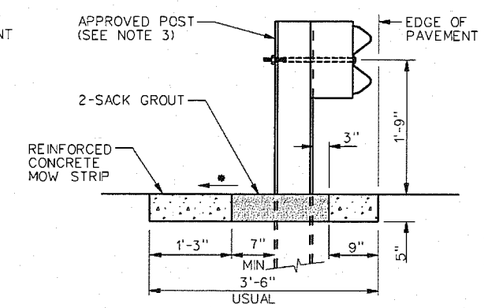

SECTION C-C
NOT TO SCALE

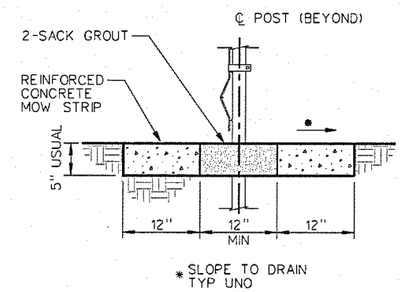

MOW STRIP UNDER ROW FENCE DETAIL

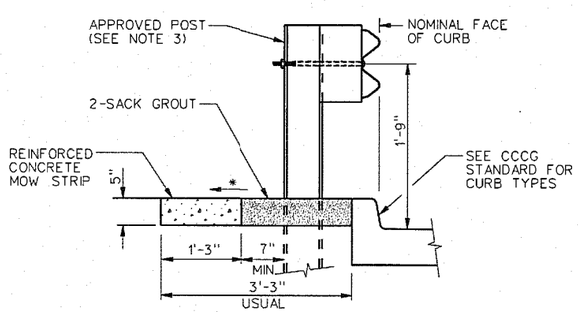

CURB OPTION (A)
SHOWN AT CURB LOCATION
NOT TO SCALE

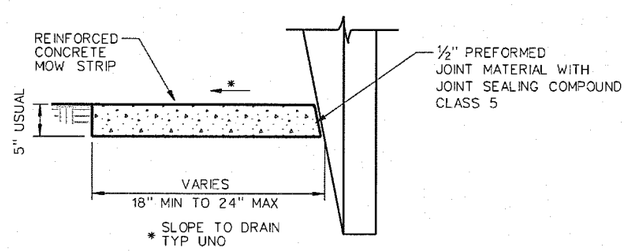

MOW STRIP (RIPRAP) ADJACENT TO VERTICAL MEMBER

NOTE:
VERTICAL MEMBER INCLUDES, BUT NOT LIMITED TO: RETAINING WALLS, FOUNDATIONS, CCTV CAMERA POLE, SOUND WALLS AND TRAFFIC RAIL/BARRIER

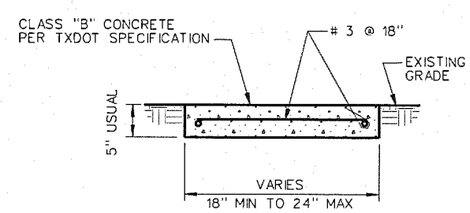

MOW STRIP (RIPRAP) DETAIL

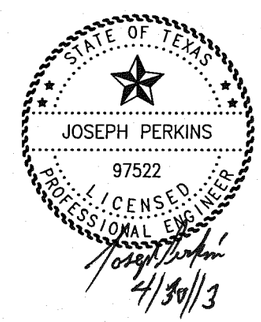

NO.	DATE	REVISION	APPROV.

NTTA®
NORTH TEXAS TOLLWAY AUTHORITY

MOW STRIP DETAIL

MSD-001-2007

DRAWN CEC	DATE 5-21-07	DESIGNED NI	DATE 5-21-07
CHECKED CEC	DATE 5-21-07	SCALE AS NOTED	

CONTRACT NO. _____ SHEET 199 OF ____

FILE NAME: \\CLDNV\SH-121\CAD\SHEETS\DETAILS\196-NTTA.DWG
SHEET SIZE: 11" x 17" 1" = 1"
4:14:56 PM 8/16/2007
\\dalw00\42436\engr\system\ntta_standards\standards\detail_sheets\NTTA-MSD-001.dgn

PROJECT (A) CONTRACTOR IS READY TO PROCEED WITH CONCRETE WORK AT THE JUNCTURE OCCURING BETWEEN PROJECTS. PAVEMENT BY THE ADJACENT CONTRACTOR HAS NOT BEEN STARTED. CONTRACTOR FOR PROJECT (A) IS RESPONSIBLE FOR INSTALLATION OF DOWEL BAR ASSEMBLY, INCLUDING EXPANSION CAP UNLESS STAGGERED, LAPPED SPLICE IS APPROVED BY THE ENGINEER.

PROJECT (B) CONTRACTOR IS READY TO PROCEED WITH CONCRETE WORK AT THE JUNCTURE BETWEEN PROJECTS WHERE A FORMED HEADER EXISTS. CONTRACTOR FOR PROJECT (B) IS RESPONSIBLE FOR JOINT PREPARATION TO TIE INTO PAVEMENT.

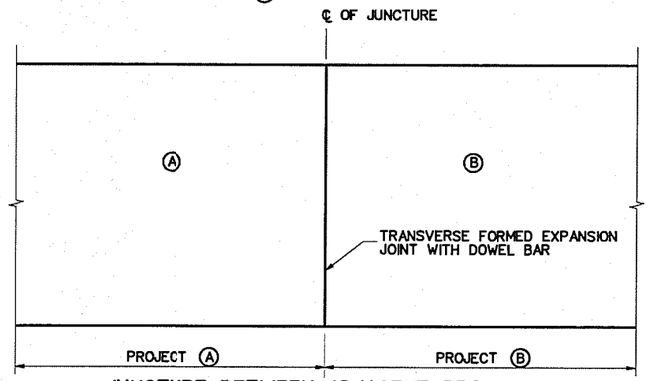

JUNCTURE BETWEEN ADJACENT PROJECTS

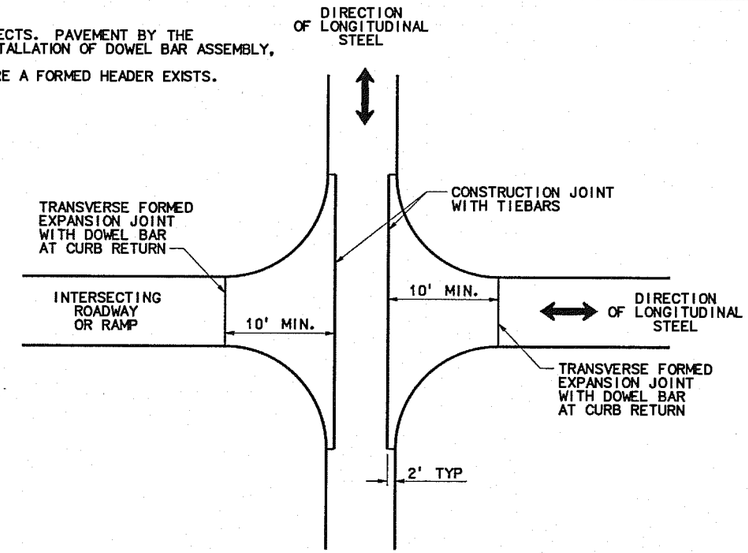

TYPICAL INTERSECTION TRANSITION

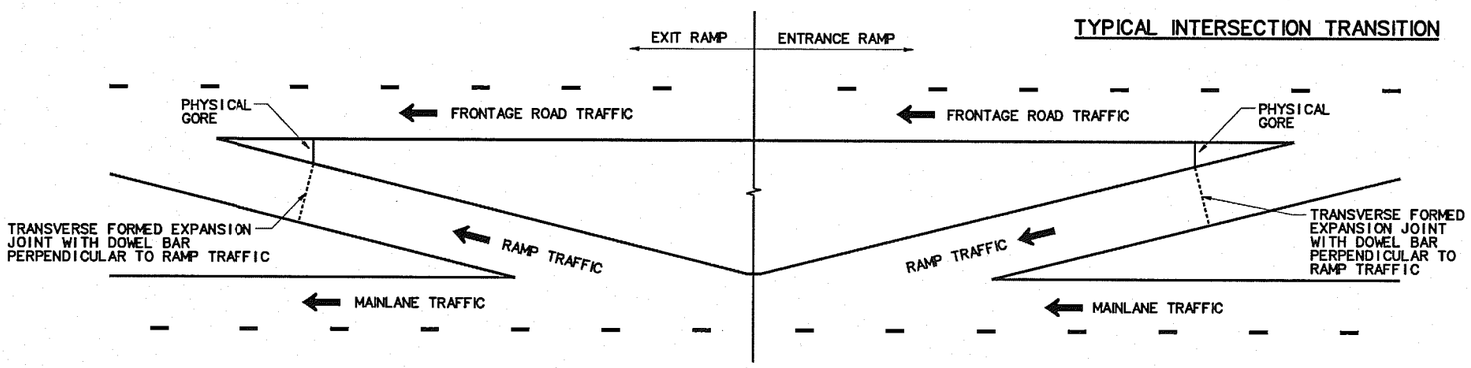

TYPICAL RAMP TRANSITION

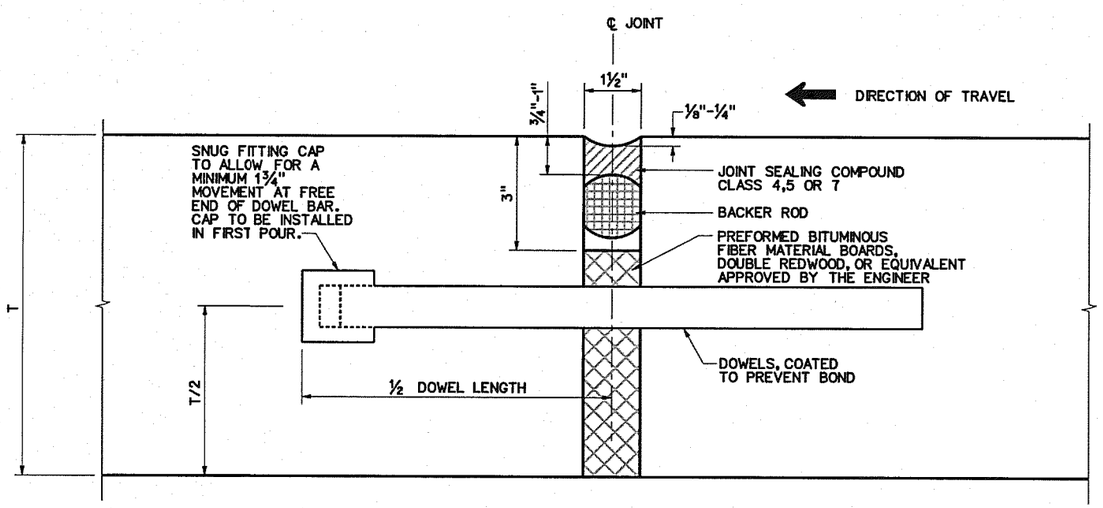

TRANSVERSE FORMED EXPANSION JOINT WITH DOWEL BAR

TABLE "A" - SMOOTH DOWEL BAR DATA			
PAVEMENT THICKNESS (INCHES) = T	DIA.	LENGTH (INCHES)	SPACING (INCHES)
8	1 IN.	18	12
9	1⅛ IN.	20	12
10-15	1¼ IN.	22	12

TABLE "B" - TIEBARS		
PAVEMENT THICKNESS (INCHES) = T	SIZE BAR (BAR NO.)	BAR SPACING (INCHES)
8	#6	18
9	#6	16
10	#6	14
11	#6	13
12	#6	12
13	#6	11

JOINT REQUIREMENTS

J1. TRANSVERSE FORMED EXPANSION JOINT WITH DOWEL BAR SHALL BE USED AT ALL JUNCTURES, RAMP TRANSITIONS AND INTERSECTION TRANSITIONS AS SPECIFIED ON THIS SHEET, UNLESS STAGGERED CONFIGURATION IS APPROVED BY THE ENGINEER.

J2. JOINTS CONNECTED WITH TIEBARS SHALL USE TRANSVERSE CONSTRUCTION JOINT AS SHOWN ON TXDOT JS-94.

J3. TRANSVERSE JOINTS (OF ANY TYPE) SHALL NOT BE CONSTRUCTED WITHIN LIMITS OF PROPOSED LOOPS FOR TOLL GANTRY.

J4. LOCATION OF TRANSVERSE FORMED EXPANSION JOINT SHALL BE ADJUSTED, AS DIRECTED BY THE ENGINEER, TO ACCOMODATE PAVEMENT THICKNESS TRANSITIONS.

REINFORCEMENT REQUIREMENTS

R1. THE DESIGN REQUIREMENTS FOR THE PAVEMENT STRUCTURE, I.E. BAR SPACING, BAR SIZE, BAR SIZE LAP REQUIREMENTS, ETC. ARE SHOWN ON THE APPROPRIATE PAVEMENT STANDARD.

R2. REINFORCING BARS SHALL BE PLACED IN ONE LAYER AND SHALL BE TIED TO THE TIEBARS.

R3. THE LENGTH OF THE LONGITUDINAL STEEL BARS SHALL END 1" FROM THE JUNCTURE OR RAMP TRANSITION, OR INTERSECTION TRANSITION UNLESS A STAGGERED LAP CONFIGURATION HAS BEEN APPROVED.

TIEBARS FOR TRANSVERSE CONSTRUCTION JOINT

T1. TIEBARS SHALL BE PLACED AT APPROXIMATELY THE MID-DEPTH OF SLAB.

T2. THE BAR SIZE AND SPACING OF TIEBARS ARE SHOWN IN TABLE "B".

T3. THE TIEBAR LENGTH SHALL BE 50" AND THE MINIMUM LENGTH OF TIEBARS EXTENDED INTO THE ADJACENT PAVEMENT AREA SHOULD BE 24"

T4. FIRST TIEBAR TO BE SET 3-4 INCHES FROM EDGE OF PAVEMENT.

T5. MULTIPLE PIECE TIEBARS SHALL BE USED UNLESS OTHERWISE APPROVED BY THE ENGINEER.

DOWELS FOR TRANSVERSE FORMED EXPANSION JOINT

D1. SMOOTH DOWEL BARS SHALL BE DELIVERED TO THE JOB SITE IN PREFABRICATED DOWEL ASSEMBLIES. THE ENTIRE DOWEL BAR SHALL BE COATED WITH A MATERIAL WHICH WILL PREVENT BONDING TO THE CONCRETE.

D2. THE SIZE AND SPACING OF DOWEL BARS SHALL BE AS SHOWN IN TABLE "A".

D3. ADJUST THE TIEBARS AND OTHER REINFORCING STEEL WHEN SPACING IS IN CONFLICT WITH THE DOWEL BAR ASSEMBLY. ALLOW MIN. 1" CLEARANCE BETWEEN REINFORCING AND DOWEL BARS TO CONFORM WITH NOTE R3. TIEBARS MAY NOT OVERLAP DOWEL BARS.

D4. DOWEL BAR PLACEMENT SHALL MEET THE REQUIREMENTS OF ITEM 360, "CONCRETE PAVEMENT."

D5. DOWEL BARS INSERTED INTO EXISTING PAVEMENT SHALL BE CORED OR MECHANICALLY DRILLED ON A LINE PARALLEL TO THE ROADWAY ALIGNMENT AND PROFILE. HAND HELD ROTARY IMPACT DRILLING IS NOT PERMITTED. DOWEL BARS WILL BE EPOXIED INTO EXISTING PAVEMENT WITH EXPANSION CAPS INSTALLED INTO NEW PAVEMENT.

D6. FIRST DOWEL BAR TO BE SET 6" FROM EDGE OF PAVEMENT.

D7. TRANSVERSE JOINT PLACEMENT SHALL BE COORDINATED WITH RAMP GANTRY LAYOUTS TO ENSURE JOINTS DO NOT INTERFERE WITH LOOP LAYOUT.

D8. DOWELLED EXPANSION JOINTS, INCLUDING ALL MATERIALS AND LABOR TO COMPLETE THE SPECIFIED WORK, ARE SUBSIDIARY TO CONCRETE PAVEMENT.

STATE OF TEXAS
JOSEPH PERKINS
97522
LICENSED PROFESSIONAL ENGINEER
5/2/13

NO.	DATE	REVISION	APPROV	DRN

NTTA
NORTH TEXAS TOLLWAY AUTHORITY

CONCRETE PAVEMENT JUNCTURES

CPJ-201-2012

DRAWN GFS DATE 6-15-12 DESIGNED DWP DATE 11-07-12
CHECKED MDB DATE 8-30-12 SCALE NTS

SHEET 1 OF 1 CONTRACT NO. _____ SHEET 199A OF ____

11/7/2012

DISCLAIMER
The use of this standard is governed by the "Texas Engineering Practice Act". No warranty of any kind is made by NTTA for any purpose whatsoever. NTTA assumes no responsibility for the conversion of this standard to other formats or for incorrect results or damages resulting from its use.

FILE NAME: J:\COLONY\SH-121\CAD\SHEETS\DETAILS\196-NTTA.DWG
SHEET SIZE: 11" X 17" 1' = 1'
11/7/2012 9:36:03 AM
\\ddlw00\projects\42436\Engr\System\Standards_Production\3-Series\CPJ\NTTA-CPJ-201.dgn

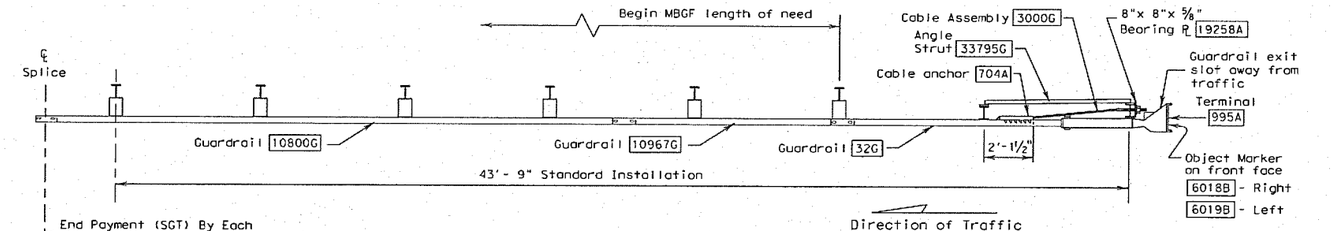

PLAN

Note:
Do not attach rail to post (1).
This applies to this "steel" post design.

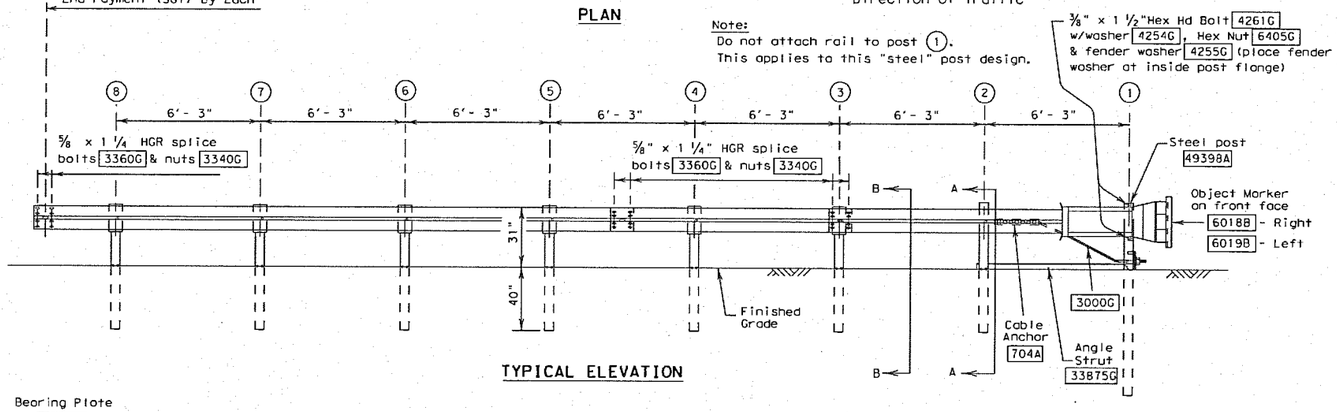

TYPICAL ELEVATION

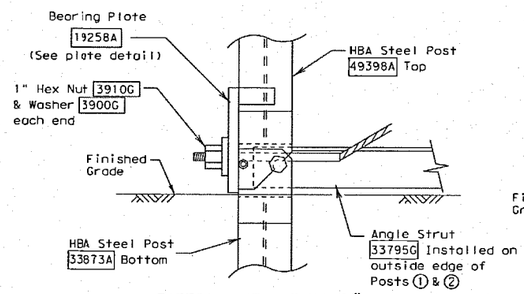

PARTIAL VIEW AT POST #1

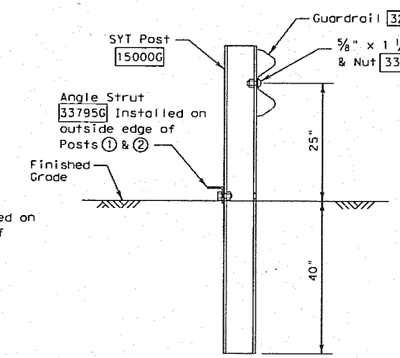

SECTION A-A

(At Post (2))

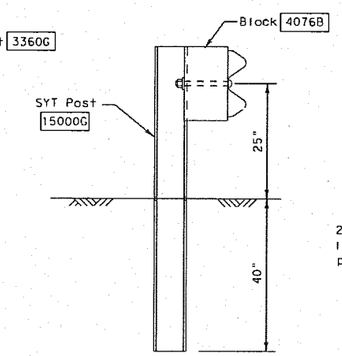

SECTION B-B

(Typical at Post (3) Thru (8))

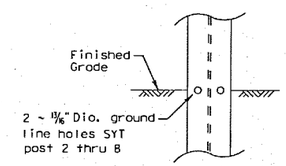

SIDE VIEW DETAIL

(Typical at Post (2) Thru (8))

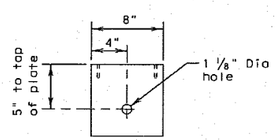

BEARING PLATE

19258A

Note: Site Condition(s)

Site conditions may exist where grading is required for the proper installation of metal guard fence and end treatments.

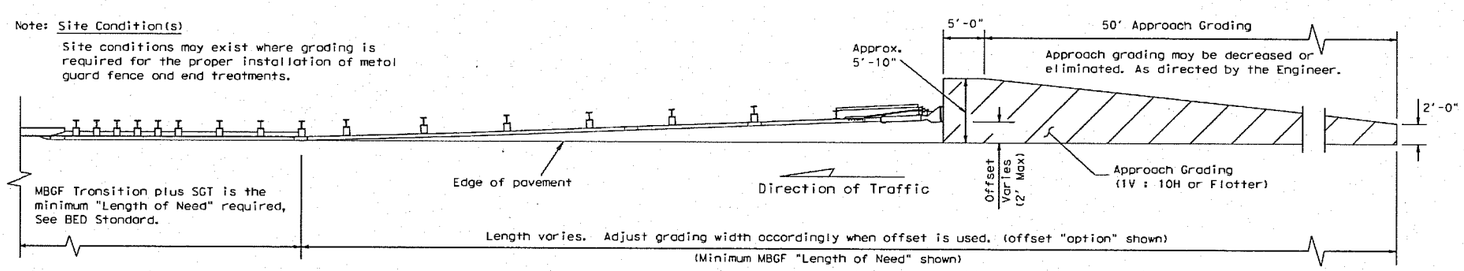

GRADING AT GUARDRAIL END TREATMENTS

GENERAL NOTES

1. For additional information contact: Trinity Highway Products, 1-800-527-6050.
2. All bolts, nuts, cable assemblies, cable anchors, steel tubes & bearing plates shall be galvanized.
3. SGT's placed within the "minimum" 150 ft. radius, shall be a installed straight. Standard rail elements may be installed within the radius, without special fabrication.
4. A flare rate of 25:1 may be used to prevent the terminal head from encroaching on the shoulder. The flare may be decreased or eliminated for specific installations, if directed by the Engineer.
5. If solid rock is encountered. See the manufacturer's installation manual for the proper installation guidance.
6. The breakaway cable assembly must be taut. A locking device, (vice grips or channel lock pliers) should be used to prevent the cable from twisting when tightening the nuts.
7. Hinge bolts shall not be set below finished grade. At curb locations the posts shall be installed at the proper ground elevation behind the curb. The posts will then require field drilling new holes to accommodate the rail to post connection bolt to maintain the proper height of the rail above the gutter pan. The excess post length above the rail will be removed as directed by the Engineer.
8. An object marker shall be installed on the front of the impact head as detailed on D&OM(VIA).
9. A special site evaluation should be considered, prior to using this end treatment where there is less than 25 feet between the extrusion side of the end treatment and any adjacent driving lane.

BILL OF MATERIAL

#	Qty.	DESCRIPTION
32G	1	Guardrail (12 Ga) at 12'- 6"
10967G	1	Guardrail (12 Ga) at 9'- 4 ½"
10800G	1	Guardrail (12 Ga) at 25'- 0"
49398A	1	HBA Steel Post - Post (1) Top
33873A	1	HBA Steel Post - Post (1) Bottom
15000G	7	SYT Steel Post - Posts (2) thru (8)
33795G	1	Angle Strut (ET/SYT/HBA)
4076B	6	Block - 14"x 6"x 8"
19258A	1	Bearing Plate - 8"x 8"x ⅝"
704A	1	Cable Anchor
3000G	1	Cable Assembly (¾"x 78")
995A	1	ET-Plus Extruder
6018B	1	Right - Object Marker
6019B	1	Left - Object Marker
3340G	31	⅝" Hex Nut
3360G	25	⅝" x 1 ¼" HGR Splice Bolt
3500G	6	⅝" x 10" Post Bolt
3701G	2	¾" Flat Washer
3704G	2	¾" Hex Nut
3717G	2	¾" x 2 ½" Hex HD Bolt (A325) ~ Post (1)
3900G	2	1" Flat Washer
3910G	2	1" Hex Nut
4254G	4	⅜" Flat Washer
4255G	2	⅜" Fender Washer (1 ½" OD)
4258G	2	⅜" Lockwasher
4261G	2	⅜" x 1 ½" Hex HD Bolt (Grade 5)
4389G	2	7/16" Flat Washer
4390G	2	7/16" x 1 ½" Hex HD Bolt ~ Post (2)
4393G	2	7/16" Lockwasher
4396G	2	7/16" Hex Nut
4699G	2	¾" Lockwasher
6321G	2	⅜" x 2" Hex HD Bolt (Grade 5) ~ Post (1)
6405G	4	⅜" Hex Nut
19948G	2	Plate Washer ~ Post (2)

Texas Department of Transportation
Design Division Standard

SINGLE GUARDRAIL TERMINAL (ET-31) (STEEL POST)

SGT(7S)31-11

FILE: sgt7s311.dgn	DN: TxDOT	CK: AM	DW: BD	CK:
© TxDOT December 2011	CONT	SECT	JOB	HIGHWAY
REVISIONS	0364	03	095	SH-121
	DIST		COUNTY	SHEET NO.
	DAL		DENTON	200

DISCLAIMER:
The use of this standard is governed by the "Texas Engineering Practice Act". No warranty of any kind is made by TxDOT for any purpose whatsoever. TxDOT assumes no responsibility for the conversion of this standard to other formats or for incorrect results or damages resulting from its use.

DATE:
FILE:

FILE NAME: J:\COLONY\SH-121\CAD\SHEETS\DETAILS\186-MBGF.DWG
SHEET SIZE: 11" X 17" 1" = 1'

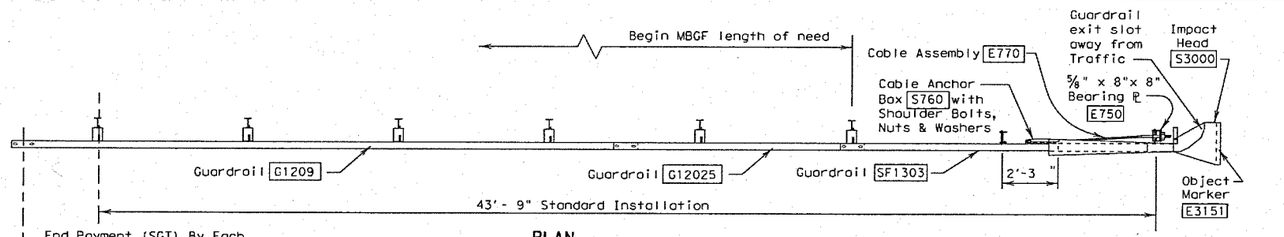

End Payment (SGT) By Each

PLAN

Note:
Do not attach rail to post (1).
This applies to this "steel" post design.

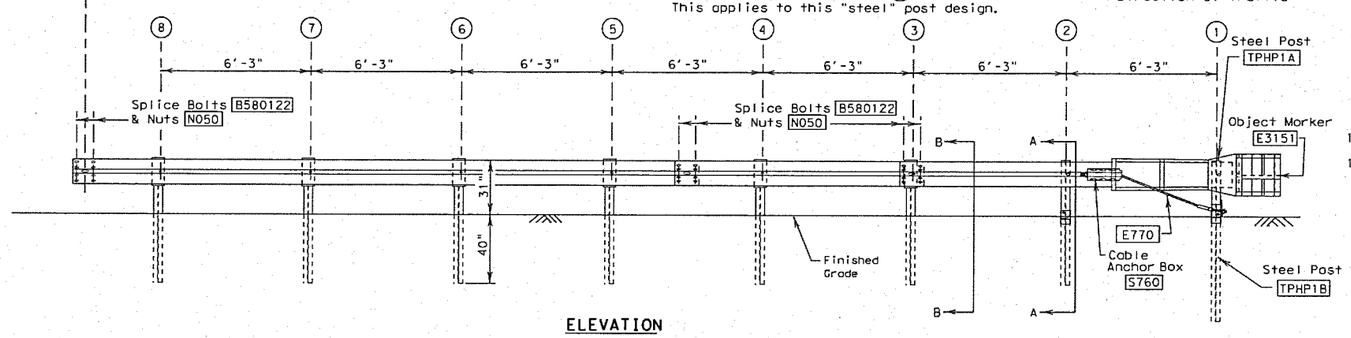

ELEVATION

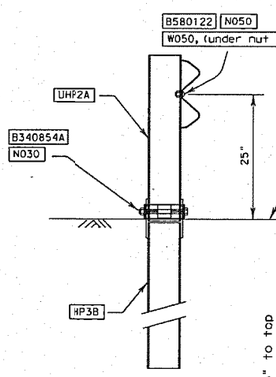

SECTION A-A

at post (2)

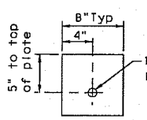

BEARING PLATE

E750

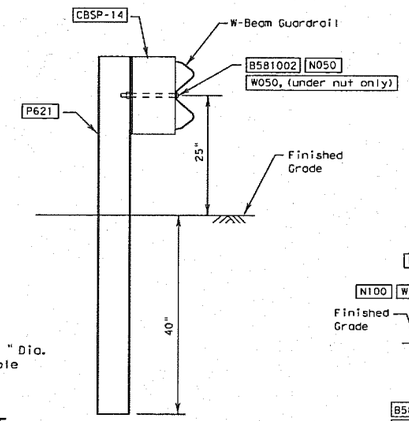

SECTION B-B

at post (3) thru (8)

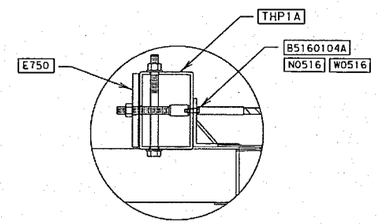

IMPACT HEAD CONNECTION DETAIL

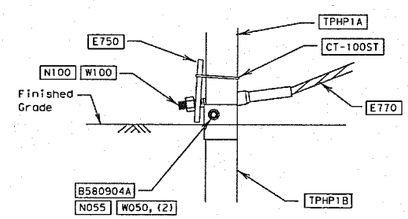

SIDE VIEW

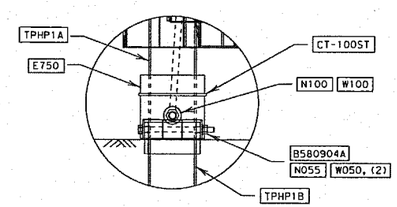

FRONT VIEW

POST #1 CONNECTION DETAILS

Note: Site Condition(s)

Site conditions may exist where grading is required for the proper installation of metal guard fence and end treatments.

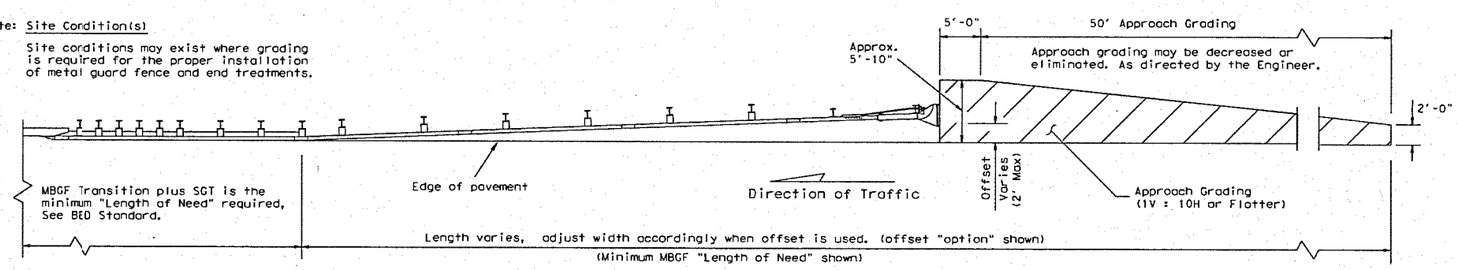

APPROACH GRADING AT GUARDRAIL END TREATMENTS

GENERAL NOTES

1. For additional information contact: Interstate Steel Inc., (432) 263-3725.
2. All bolts, nuts cable assemblies, cable anchors, steel posts & bearing plates shall be galvanized.
3. SGT's placed within the "minimum" 150 ft. radius, shall be installed straight. Standard rail elements may be installed within the radius without special fabrication.
4. A flare rate of 25:1 may be used to prevent the terminal head from encroaching on the shoulder. The flare may be decreased or eliminated for specific installations, if directed by the Engineer.
5. The lower sections of the post shall not protrude more than 4 inches above finished ground. Site grading may be necessary to meet this requirement.
6. The lower section of the steel posts should not be driven with the upper post attached. If the post is placed in a drilled hole, the backfill material must be satisfactorily compacted to prevent settlement.
7. If solid rock is encountered. See manufacturer's installation manual for the proper installation guidance.
8. The breakaway cable assembly must be taut. A locking device, (vice grips or channel lock pliers) should be used to prevent the cable from twisting when tightening the nuts.
9. Hinge bolts shall not be set below finished grade. At curb locations the posts shall be installed at the proper grade elevation behind the curb. The posts will then require field drilling new holes to accommodate the rail to post connection bolt to maintain the proper height of the rail above the gutter pan. The excess post length above the rail will be removed as directed by the Engineer.
10. An object marker shall be installed on the front of the impact head as detailed on D&OM(VIA).
11. A special site evaluation should be considered, prior to using this end treatment where there is less than 25 feet between the outlet side of the end treatment and any adjacent driving lane.

ITEM NO.	QTY	BILL OF MATERIALS
S1303	1	GUARDRAIL (12 GA) 12'- 6" SKT Panel
G12025	1	GUARDRAIL (12 GA) 9' - 4 ½"
G1209	1	GUARDRAIL (12 GA) 25'- 0"
TPHP1A	1	FIRST POST ASSEMBLY TOP, TUBE
TPHP1B	1	FIRST POST ASSEMBLY BOTTOM, 6'- 0"
UHP2A	1	SECOND POST ASSEMBLY TOP
HP3B	1	SECOND POST ASSEMBLY BOTTOM, 6'- 0"
P621	6	STANDARD STEEL LINE POST 6'- 0" (POST 3 THRU 8)
E750	1	BEARING PLATE
S760	1	CABLE ANCHOR BOX
E770	1	BCT CABLE ANCHOR ASSEMBLY
CT-100ST	1	CABLE TIE - STEEL
CBSP-14	6	ROUTED BLOCK
S3000	1	IMPACT HEAD
B580122	25	⅝" Dia. x 1 ¼" SPLICE BOLT
B580904A	1	⅝" Dia. x 9" HEX BOLT GR. 5
B340854A	1	¾" Dia. x 8 ½" HEX BOLT GR. 5
B581002	6	⅝" Dia. x 10" H.G.R. BOLT (Post 3 thru 8)
N055	1	⅝" Dia. HEX NUT (Post 1 only)
N050	31	⅝" Dia. H.G.R. NUT (at splices & at Post 1 thru 8)
W050	9	H.G.R. WASHER (At Post 2 thru 8)
N100	2	1" ANCHOR CABLE HEX NUT
W100	2	1" ANCHOR CABLE WASHER
B5160104A	2	5/16" x 1" HEX BOLT, GR. 5
N0516	2	5/16" HEX NUT
W0516	4	5/16" WASHER
SB58A	8	CABLE ANCHOR BOX SHOULDER BOLT
N030	1	¾" HEX NUT
N055A	8	½" A325 STR. NUT
W050A	16	1 1/16" OD x ⅝" ID A325 STR. WASHER
E3151	1	OBJECT MARKER (18" x 18")

Texas Department of Transportation
Design Division Standard

SINGLE GUARDRAIL TERMINAL (SKT-31) (STEEL POST)

SGT(8S)31-11

FILE: sgt8s311.dgn	DN: TxDOT	CK: AM	DW: BD	CK:
© TxDOT December 2011	CONT	SECT	JOB	HIGHWAY
REVISIONS	0364	03	095	SH-121
	DIST		COUNTY	SHEET NO.
	DAL		DENTON	201

DISCLAIMER:
The use of this standard is governed by the "Texas Engineering Practice Act". No warranty of any kind is made by TxDOT for any purpose whatsoever. TxDOT assumes no responsibility for the conversion of this standard to other formats or for incorrect results or damages resulting from its use.

DATE:
FILE:

FILE NAME: J:\COLORA\SH-121\CAD\SHEETS\DETAILS\188-MBGF.DWG
SHEET SIZE: 11" X 17" 1" = 1'

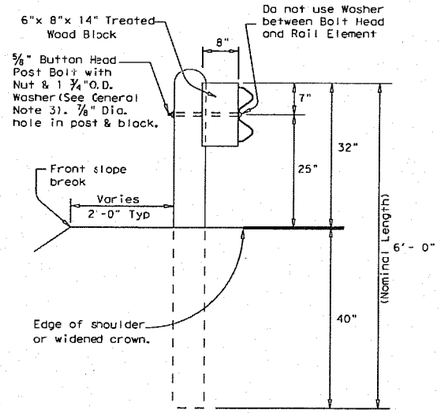

TYPICAL POST

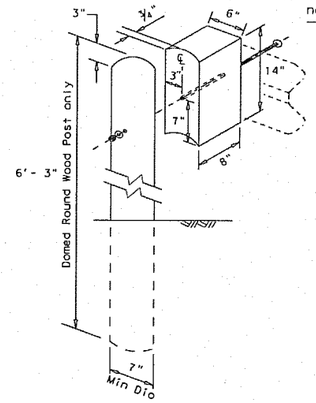

WOOD BLOCK TO ROUND WOOD POST

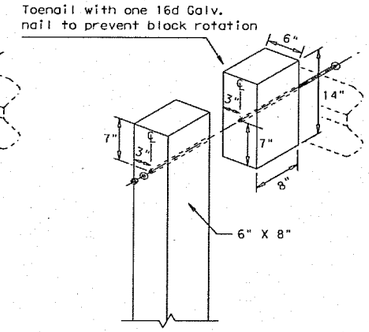

WOOD BLOCK TO RECTANGULAR WOOD POST

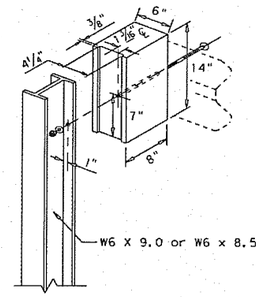

WOOD BLOCK TO STEEL POST

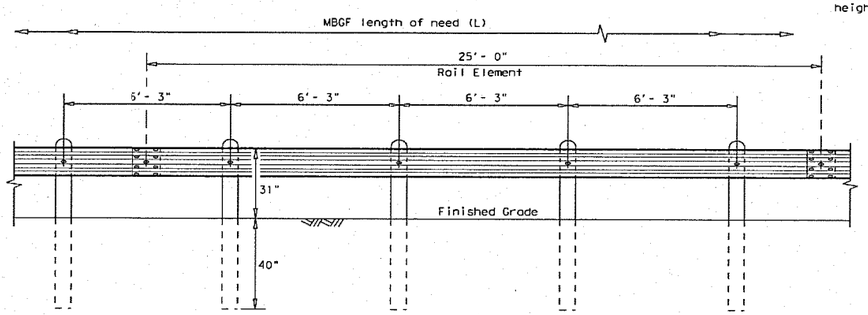

ELEVATION
MID-SPAN RAIL SPLICE

Showing a 25'- 0" section of W-Beam rail, 12'- 6" rail sections may also be supplied (See General Note 2)

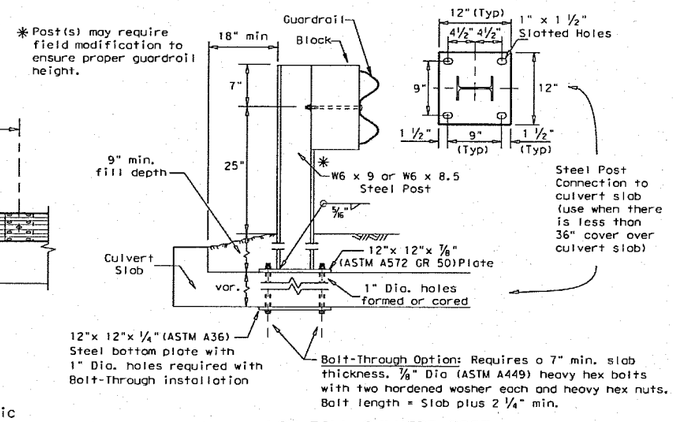

Direction of Traffic

LOW FILL CULVERT POST

For use on culverts up to 50 ft. in length. Culverts of 25 ft. or less, See GF(31)LS standard for "Long Span" option.

Epoxy Note:
Epoxy Anchor Option: This option may only be used if the culvert slab is 8" min. thick. Threaded anchor rods must be ⅞" Dia. ASTM A449 or A193 Grade B7 with heavy hex nut, and one hardened washer each. Embed anchor rods 6" with Hilti HIT RE 500 epoxy adhesive. Other Type III Class C epoxy adhesives meeting the requirements of DMS-6100, "Epoxies and Adhesives", may be used if it can be demonstrated that they meet or exceed the strength of Hilti HIT RE 500 with the same embedment depth and threaded rod dia. Follow the manufacturer's requirements for installing epoxied threaded rods. Extend rods ¼" min. beyond nut.

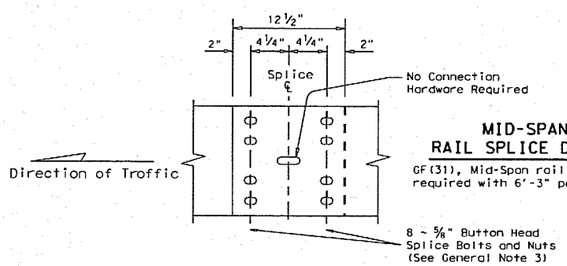

MID-SPAN
RAIL SPLICE DETAIL

GF(31), Mid-Span rail splices are required with 6'-3" post spacings.

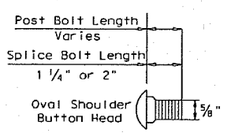

BUTTON HEAD BOLT

Post and Splice Bolts
(See General Note 3)

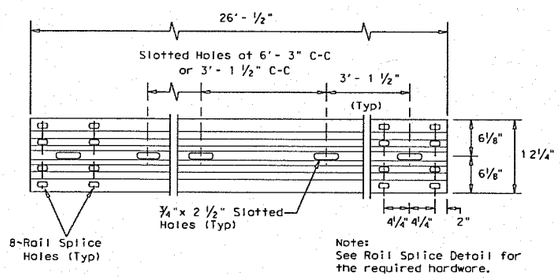

ELEVATION 25'- 0" (NOM.) W-BEAM SECTION

12'- 6" rail sections may also be supplied (See General Note 2)

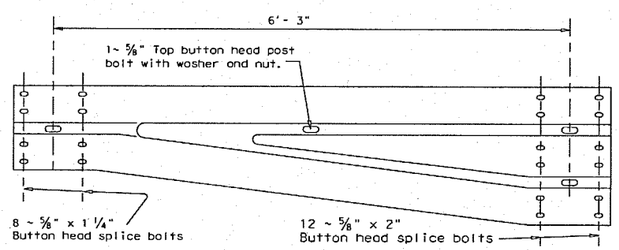

NON-SYMMETRICAL TRANSITION
FROM W-BEAM TO CONCRETE RAIL (10 GA.)

(See GF(31)DAT for Downstream Connection to Concrete Rail)

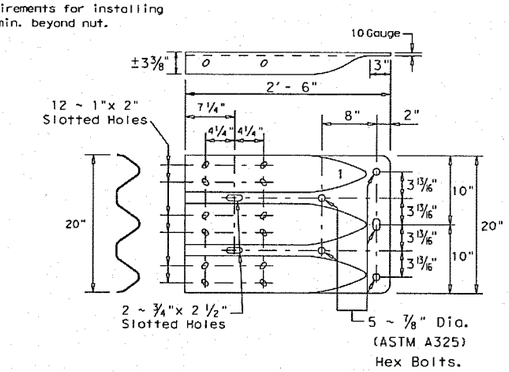

THRIE-BEAM TERMINAL CONNECTION (10 GA.)

(See General Note 3 for required hardware)

GENERAL NOTES

1. The type of post (round wood post, rectangular wood post, or steel post) will be as shown in the plans. The exact position of MBGF shall be shown in the plans or as directed by the Engineer. Steel posts to be galvanized in accordance with Item 445, "Galvanizing."
2. Rail element shall meet the requirements of Item 540, "Metal Beam Guard Fence" except as modified in the plans. The Contractor may furnish rail elements of 25'- 0", or 12'- 6" (nom.) lengths. Rail elements may have slotted holes at 3'-1½" C-C or 6'-3" C-C. A special length of rail may be manufactured to accommodate the downstream anchor terminal (DAT) and the transition sections of guardrail.
3. Button head "post" bolts (ASTM A307) shall be of sufficient length to extend through the full thickness of the nut (ASTM A563) and Type A (1 ¾" O.D.) washer and not more than 1" beyond it. Button head "splice" bolts (ASTM A307) are ⅝" x 1 ¼" (or 2" long at triple rail splices) with a ⅝" double recessed nut (ASTM A563). Thrie beam "connection" ⅞" dia. (ASTM A325) hex bolts shall be of sufficient length to extend through the full thickness of the rail, washers, and nuts.
4. Fittings (bolts, nuts, and washers) shall be galvanized in accordance with Item 445, "Galvanizing." Fittings shall be subsidiary to the bid item.
5. Crown shall be widened to accommodate the Metal Beam Guard Fence.
6. The lateral approach to the guard fence, shall have a maximum slope of 1V:10H.
7. If shown elsewhere in the plans or as directed by the Engineer, the guard fence may be flared at a rate of 25:1 or flatter.
8. Unless otherwise shown in the plans, guard fence placed in the vicinity of curbs shall be positioned so that the face of curb is located directly below or behind the face of the rail. Rail placed over curbs shall be installed so that the post bolt is located approximately 25 inches above the gutter pan or edge of shoulder.
9. If solid rock is encountered within 0 to 18" of the finished grade, drill a 22" dia. hole, or drill two 12" dia. front to back overlapping holes, 24" into the rock. If solid rock is encountered below 18", drill a 12" dia. hole, 12" into the rock or to the standard embedment depth, whichever maybe less. Any excess post length, after meeting these depths, may be field cut to ensure proper guardrail mounting height. Backfill with a cohesionless material.
10. Posts shall not be set in concrete, of any depth.
11. Special fabrication will be required at installations having a curvature of less than 150 ft. radius.
12. Unless otherwise shown in the plans, a composite material post and/or block that meets the requirements of DMS-7210, "Composite Material Posts and Blocks for Metal Beam Guard Fence" may be substituted for posts and/or blocks of similar dimensions. The Construction Division, TxDOT maintains a Material Producer List (MPL) for producers of materials conforming to DMS-7210. Only producers on the MPL may furnish composite material posts and/or blocks.
13. For posts located partially or wholly between precast box culvert units, the use of a cast-in-place concrete closure between boxes is required. See Detail "A" on Bridge Standard SCP-MD.

Texas Department of Transportation
Design Division Standard

METAL BEAM GUARD FENCE

GF(31)-11

FILE: gf3111.dgn	DN: TxDOT	CK: AM	DW: VP	CK:
© TxDOT December 2011	CONT	SECT	JOB	HIGHWAY
REVISIONS	0364	03	095	SH-121
	DIST		COUNTY	SHEET NO.
	DAL		DENTON	202

DISCLAIMER:
The use of this standard is governed by the "Texas Engineering Practice Act". No warranty of any kind is made by TxDOT for any purpose whatsoever. TxDOT assumes no responsibility for the conversion of this standard to other formats or for incorrect results or damages resulting from its use.

DATE:
FILE:

FILE NAME: J:\COLORA\SH-121\CAD\SHEETS\DETAILS\TBG-MBGF.DWG
SHEET SIZE: 11" X 17" 1" = 1'

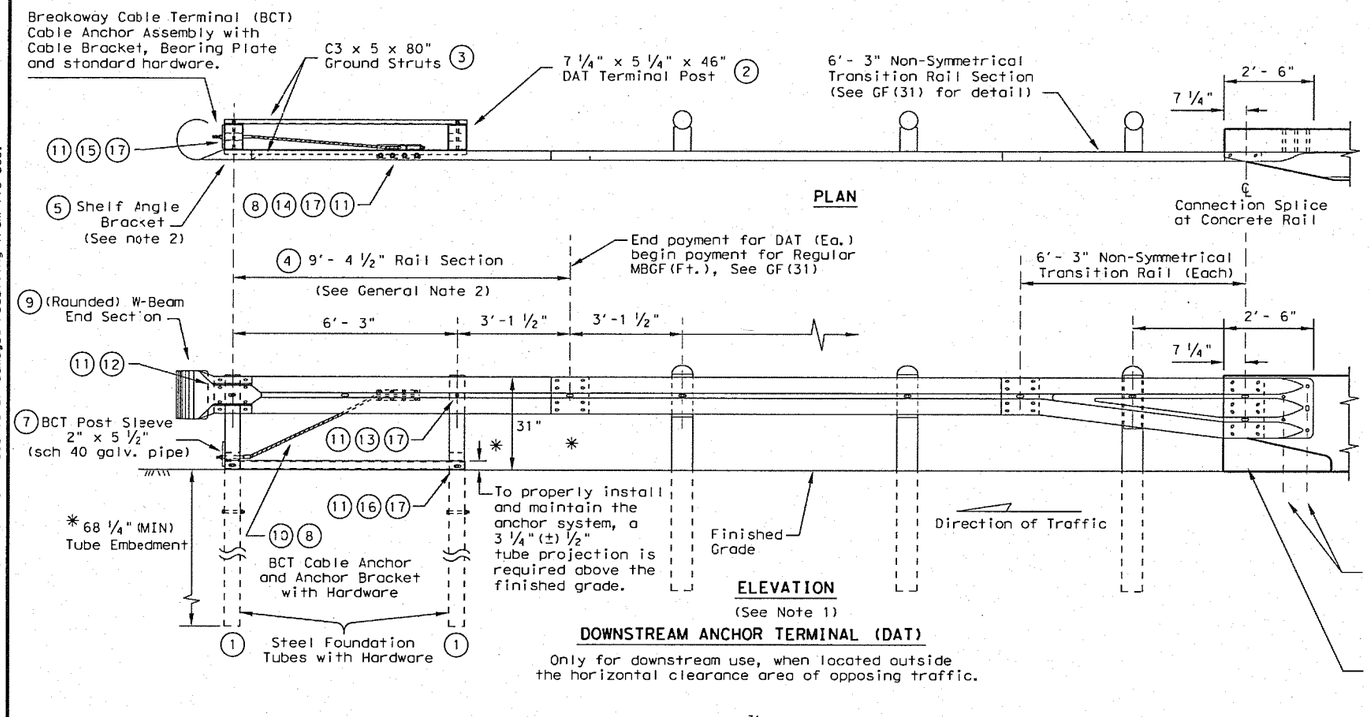

DOWNSTREAM ANCHOR TERMINAL (DAT)

Only for downstream use, when located outside the horizontal clearance area of opposing traffic.

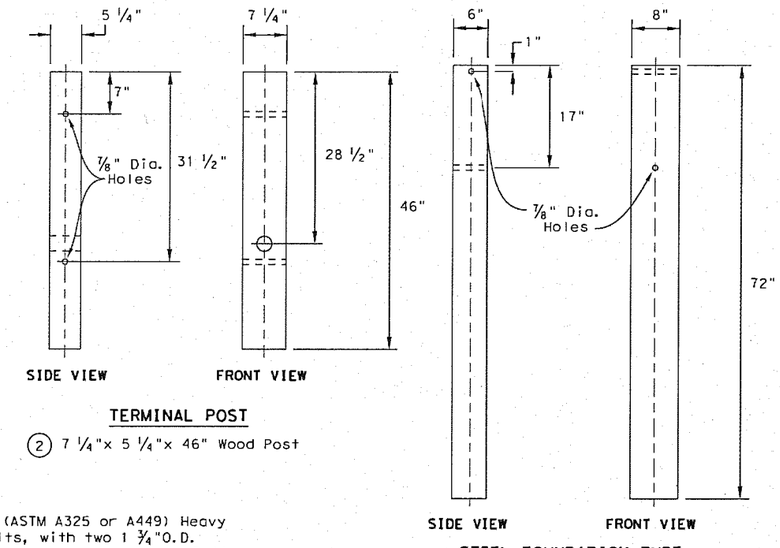

TERMINAL POST

(2) 7 1/4" x 5 1/4" x 46" Wood Post

STEEL FOUNDATION TUBE

(1) 6" x 8" x 1/8" x 72" Steel Tube

#	(DAT) PARTS LIST	QTY.
(1)	Steel Foundation Tube	2
(2)	DAT Terminal Post	2
(3)	Channel Strut	2
(4)	Terminal Rail Element	1
(5)	Shelf Angle Bracket	1
(6)	BCT Bearing Plate	1
(7)	BCT Post Sleeve	1
(8)	Guardrail Anchor Bracket	1
(9)	(Rounded) W-Beam End Section	1
(10)	BCT Cable Anchor	1
(11)	Recessed Nut, Guardrail	20
(12)	1 1/4" Button Head Bolt	4
(13)	10" Button Head Bolt	2
(14)	5/8" x 2" Hex Head Bolt	8
(15)	5/8" x 8" Hex Head Bolt	4
(16)	5/8" x 10" Hex Head Bolt	2
(17)	5/8" Flat Washer	18

Terminal Connection Note

To ensure a stable connection. (12) Rectangular Washers (FWR03) are required under the recessed nuts at the Terminal Connection splice.

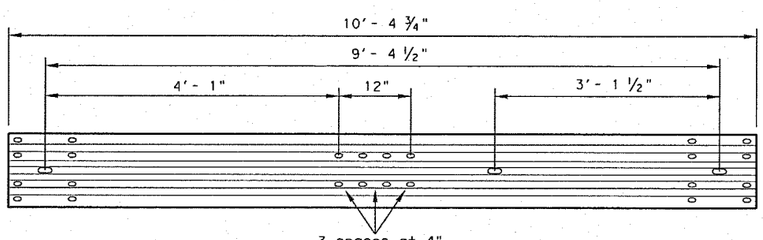

(4) TERMINAL RAIL ELEMENT FOR DAT

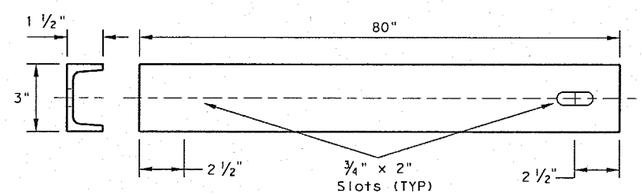

(3) CHANNEL STRUT

C3 x 5 x 80", Grade A36

GENERAL NOTES

1. The DAT detail shown is the minimum Length of Need (LON) for a DAT connected to a concrete rail.
2. The rail section at the end post is supported by the Shelf Angle Bracket. The rail element is not attached to the end post.
3. The foundation tubes shall not project more than 3 3/4" above the finished grade.
4. All hardware for DAT shall be ASTM A307 unless otherwise shown.
5. Refer to GF(31) sheet for terminal connection details.

MOW STRIP INSTALLATION

If a mow strip is required with the DAT installation the leave-out area around the steel foundation tubes and the two channel struts may be omitted. This will require a full pour at the foundation tubes.

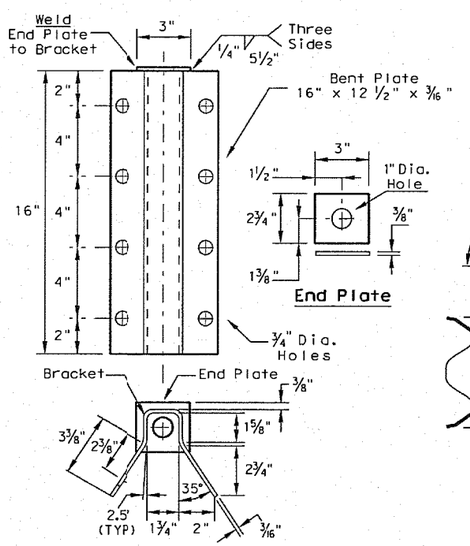

(8) GUARDRAIL ANCHOR BRACKET

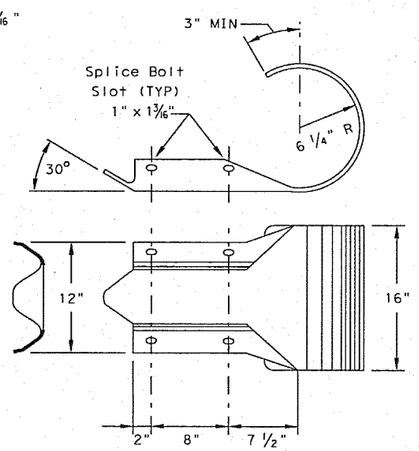

(9) W-BEAM END SECTION (ROUNDED) (12 GA.)

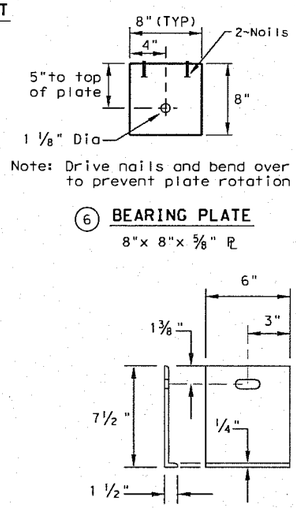

Note: Drive nails and bend over to prevent plate rotation

(6) BEARING PLATE

8" x 8" x 5/8" PL

(5) SHELF ANGLE BRACKET

Texas Department of Transportation
Design Division Standard

METAL BEAM GUARD FENCE
(Downstream Anchor Terminal)
GF(31)DAT-11

FILE: gf31dat1.dgn	DN: TxDOT	CK: AM	DW: VP	CK:
© TxDOT December 2011	CONT	SECT	JOB	HIGHWAY
REVISIONS	0364	03	095	SH-121
	DIST		COUNTY	SHEET NO.
	DAL		DENTON	203

DISCLAIMER:
The use of this standard is governed by the "Texas Engineering Practice Act". No warranty of any kind is made by TxDOT for any purpose whatsoever. TxDOT assumes no responsibility for the conversion of this standard to other formats or for incorrect results or damages resulting from its use.

DATE:
FILE:

FILE NAME: =X:\COLONY\SH-121\CADD\SHEETS\DETAILS\1BB-MBGF.DWG
SHEET SIZE: 11" X 17" 1" = 1"

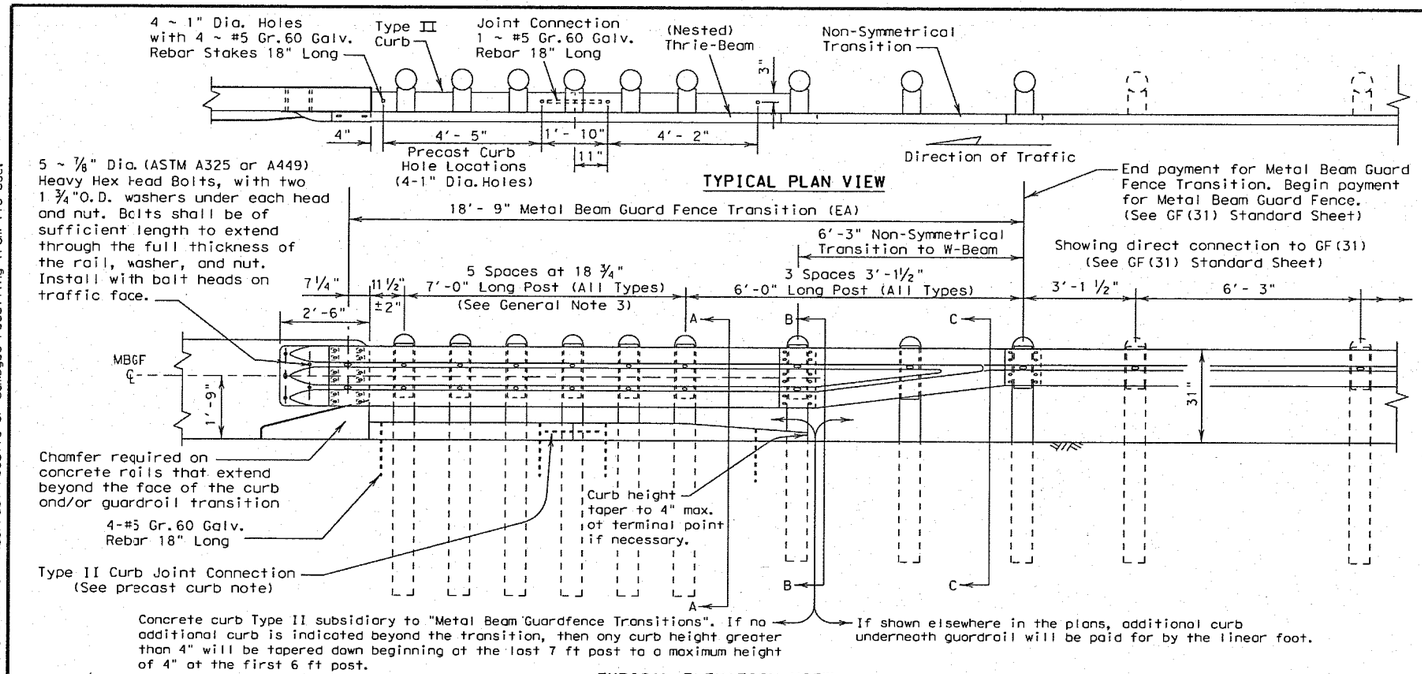

TYPICAL PLAN VIEW

TYPICAL ELEVATION VIEW

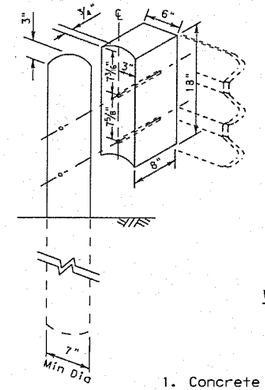

WOOD BLOCK TO ROUND WOOD POST

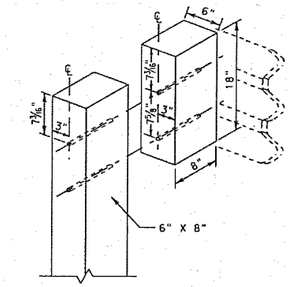

WOOD BLOCK TO RECTANGULAR WOOD POST

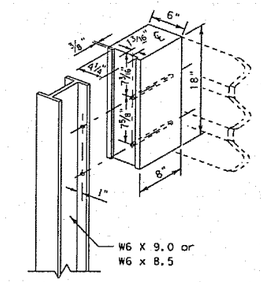

WOOD BLOCK TO STEEL POST

GENERAL NOTES

1. Concrete curb may be cast-in-place or precast as shown on this sheet. When used in conjunction with thrie-beam guard fence transitions, curb shall be Type II (Typically 5 3/4" height above surface; See CCCG standard sheet) unless otherwise shown in the plans. If other curb heights are shown in the plans in conjunction with the transition, the curb height may be from 4" to 8" with a relatively vertical face. Concrete curb shall be continuous to the seventh post.

   Contact the Design Division for drainage cut options needed within the curb section of the transition.

2. The type of post (round wood post, rectangular wood post or steel post) will be as shown in the plans.

3. The post length shall be marked on all 7'- 0" long posts by the Manufacturer. The mark shall be located within the top 1 ft. region of the post, at least 5/8" in height, and visible after installation. Wooden posts shall be marked with a brand, and steel posts with a stencil before galvanizing.

4. Rail element shall meet the requirements of Item 540, "Metal Beam Guard Fence" except as modified on the plans. The thrie-beam terminal connector and the thrie-beam transition to w-beam shall be of the same material, but shall not be less than 10 gauge.

   Contractor shall verify that the locations of bolt holes match those in the thrie-beam terminal connector prior to ordering materials.

5. Unless otherwise shown in the plans, transitions shall be placed with the block face in front of or directly above the curb face.

6. Galvanized washers used with the 5/8" dia. post bolts shall be Type A 1 3/4" O.D. washers. The (12) plate washers (FWR03) required at the terminal connector splice.

7. Button head "post" bolts (ASTM A307) shall be of sufficient length to extend through the full thickness of the nut (ASTM A563) and washer and not more than 1" beyond it. Button head "splice" bolts (ASTM A307) 5/8" Dia. x 2" (at triple rail splices) with 5/8" double recessed nuts.

8. Fittings (bolts, nuts, and washers) shall be galvanized in accordance with Item 445, "Galvanizing". Fittings shall be subsidiary to the bid item.

9. Crown shall be widened to accommodate transitions.

10. If solid rock is encountered. See the MBGF standard sheet for the proper installation guidance.

11. Posts shall not be set in concrete.

12. Unless otherwise shown in the plans, a composite material post and/or block that meets the requirements of DMS-7210, "Composite Material Posts and Blocks for Metal Beam Guard Fence" may be substituted for posts and/or blocks of similar dimensions. The Construction Division, TxDOT, maintains a Material Producer List (MPL) for producers of materials conforming to DMS-7210. Only producers on the MPL can furnish composite material posts and/or blocks.

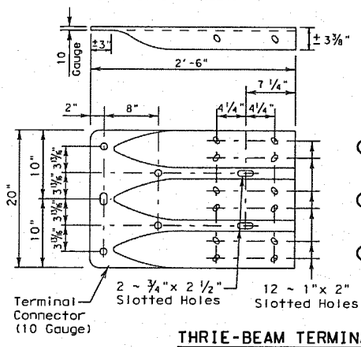

THRIE-BEAM TERMINAL CONNECTION
(See General Notes 6 & 7 for required hardware)

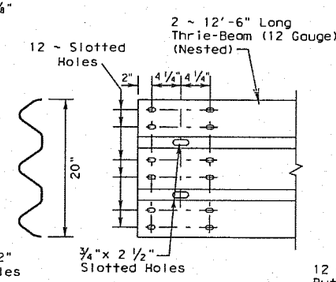

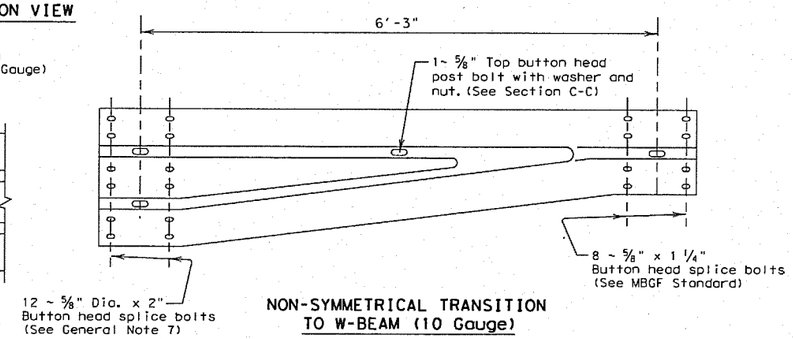

NON-SYMMETRICAL TRANSITION TO W-BEAM (10 Gauge)

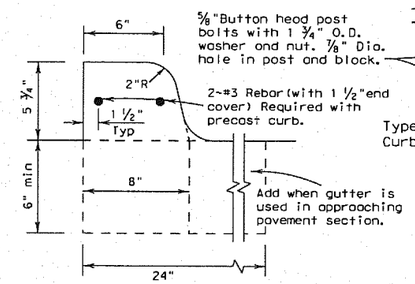

TYPE II CURB
Cast-in-Place or Precast

PRECAST CURB: Type II Precast Curb secured with 4~#5 Gr.60 Galv. Rebar stakes 18" long. The 12'- 2" section of curb may be cast in two sections.
Section ① 5'- 8" long
Section ② 6'- 6" long with the last 3'- 6" of curb tapered to a 4" height.
The Joint Connection is two 9" long 1" dia female ends connected with 1~#5 Gr.60 Galv. Rebar 18" long.

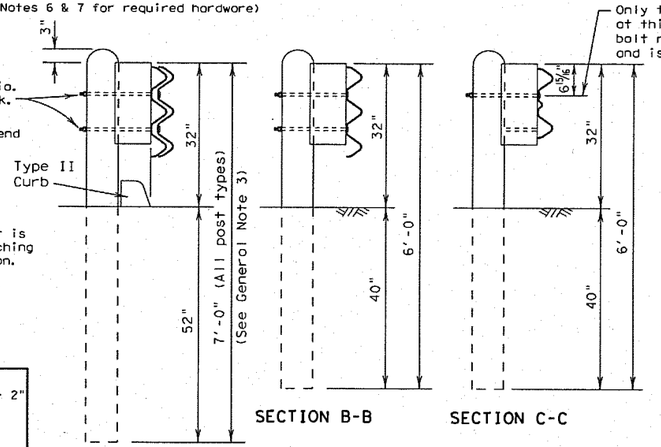

SECTION A-A
SECTION B-B
SECTION C-C

TRANSITION SECTIONS

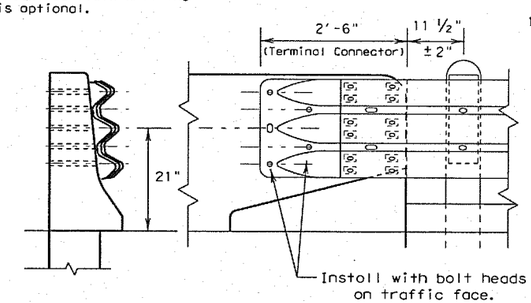

CONNECTION TO CONCRETE BRIDGE RAIL AND TRAFFIC BARRIERS

(12) Galvanized rectangular washers (FWR03) are required under the recessed nut at the terminal connector splice to nested thrie-beam. (See General Notes 6 & 7)

Texas Department of Transportation
Design Division Standard

METAL BEAM GUARD FENCE TRANSITION
(Thrie-Beam Transition)
GF(31)TR-11

FILE: gf31trll.dgn	DN: TxDOT	CK: AM	DW: BD	CK:
© TxDOT December 2011	CONT	SECT	JOB	HIGHWAY
REVISIONS	0364	03	095	SH-121
	DIST		COUNTY	SHEET NO.
	DAL		DENTON	204

DISCLAIMER:
The use of this standard is governed by the "Texas Engineering Practice Act". No warranty of any kind is made by TxDOT for any purpose whatsoever. TxDOT assumes no responsibility for the conversion of this standard to other formats or for incorrect results or damages resulting from its use.

DATE:
FILE:

FILE NAME: pw:\\COLGDWV\SH-121\CAD\SHEETS\DETAILS\1B8-MBGF.DWG
SHEET SIZE: 11" X 17" 1' = 1'

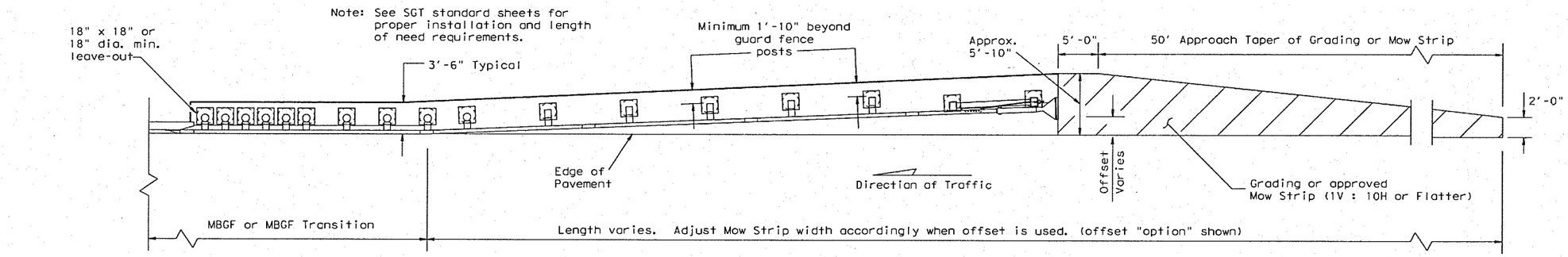

GRADING AND MOW STRIP AT GUARDRAIL END TREATMENTS

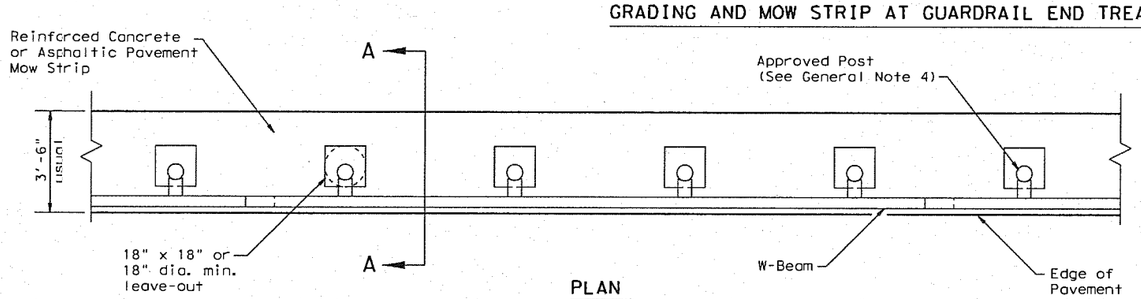

PLAN

GF(31) shown with Mow Strip (See GF(31) standard sheet for proper installation)

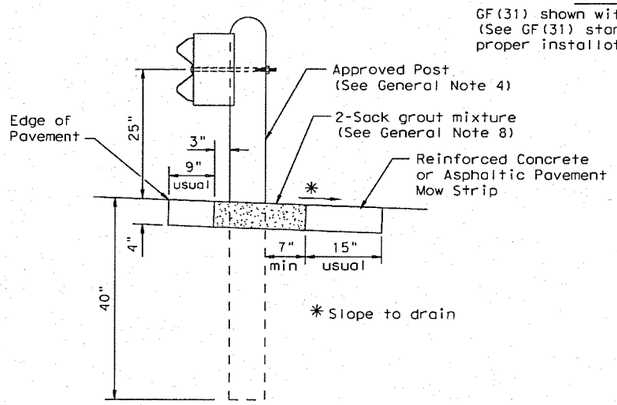

SECTION A-A

Typical

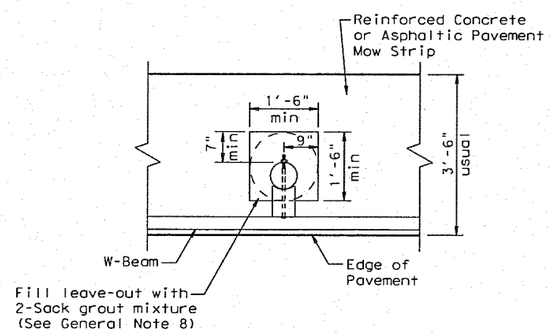

MOW STRIP DETAIL

Reinforced Concrete or Asphaltic Pavement Mow Strip with 18" x 18" or 18" dia. minimum leave-out.

Note: Site Condition(s)

Site conditions may exist where grading is required for the proper installation of metal guard fence and end treatments.

Approach grading or mow strip may be decreased or eliminated, as directed by the Engineer.

GENERAL NOTES

1. This mow strip design is for use with metal beam guard fence, guard fence transitions, and guard fence end treatments (See SGT standards for proper SGT installation).
2. Mow strips shall be asphaltic pavement or reinforced concrete (wire mesh or synthetic fiber), as shown on the plans and will be paid for under the pertinent bid item. Asphaltic pavement shall meet the requirements of the item, and be placed in accordance with the pertinent bid item as shown in the plans. Reinforced concrete shall be placed in accordance with Item 432, "Riprap." The use of the synthetic fiber in lieu of steel reinforcing is acceptable, provided the fiber producer is on the Department Material Producer List (MPL), maintained by TxDOT, Construction Division.
3. The leave-out behind the post shall be a minimum of 7".
4. The type of approved post will be as shown in the plans. See the applicable standard sheets for additional details and information.
5. Other curb placement options may be used. Curbs are not considered part of the mow strip and will be paid for under other pertinent bid item.
6. Thickness of the mow strip will be 4".
7. The limits of payment for asphaltic pavement or reinforced concrete will include leave-outs for the posts.
8. The leave-outs shall be filled with no more than a 2-sack grout mixture and placed in accordance with Section 421.2.F, "Mortar and Grout." Payment for furnishing and placing the grout mixture will be subsidiary to the pay item of asphaltic pavement or reinforced concrete.

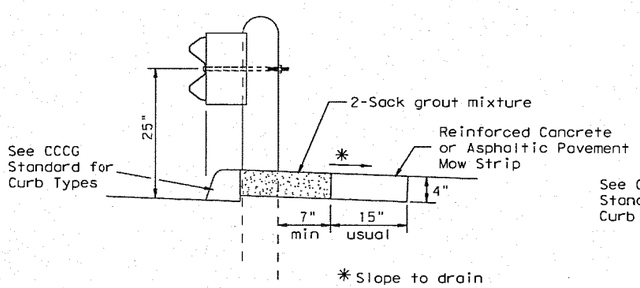

CURB OPTION (1)

This option will increase the past embedment through out the system.

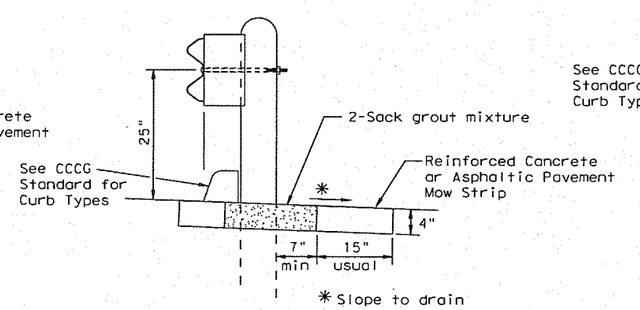

CURB OPTION (2)

Curb shown on top of mow strip

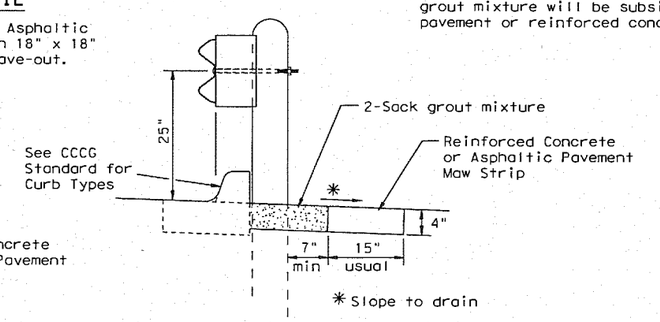

CURB OPTION (3)

Texas Department of Transportation
Design Division Standard

METAL BEAM GUARD FENCE (MOW STRIP)

GF(31)MS-11

FILE: gf31ms11.dgn	DN: TxDOT	CK: AM	DW: BD	CK:
© TxDOT December 2011	CONT	SECT	JOB	HIGHWAY
REVISIONS	0364	03	095	SH-121
	DIST		COUNTY	SHEET NO.
	DAL		DENTON	205

DISCLAIMER:
The use of this standard is governed by the "Texas Engineering Practice Act". No warranty of any kind is made by TxDOT for any purpose whatsoever. TxDOT assumes no responsibility for the conversion of this standard to other formats or for incorrect results or damages resulting from its use.

DATE:
FILE:

FILE NAME: J:\COLONY\SH-121\CAD\SHEETS\DETAILS\168-MBGF.DWG
SHEET SIZE: 11" X 17" 1" = 1"

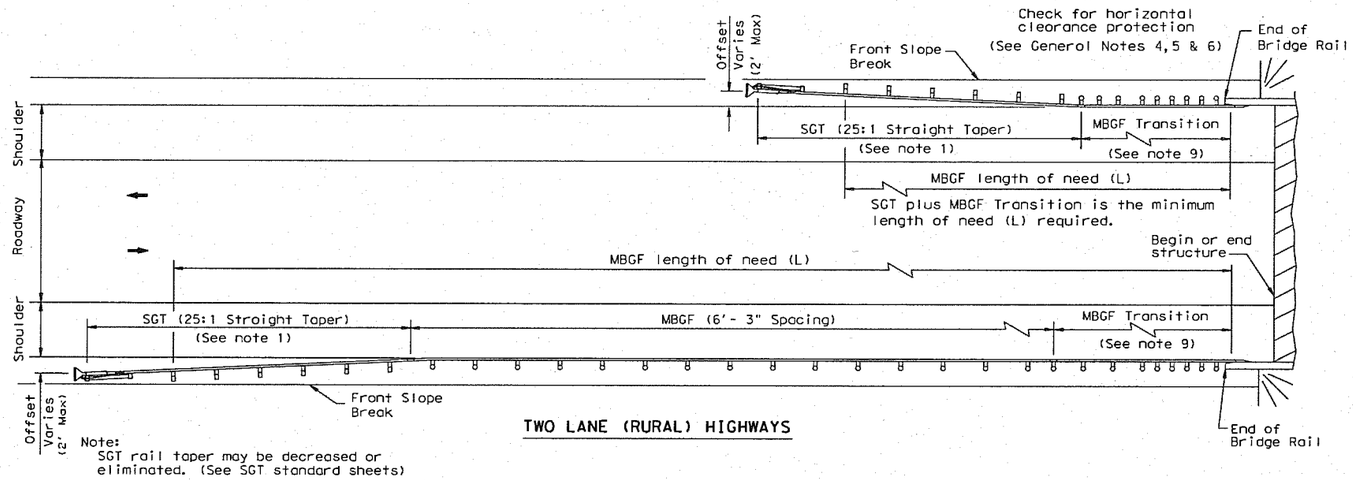

Note:
SGT rail taper may be decreased or eliminated. (See SGT standard sheets)

TWO LANE (RURAL) HIGHWAYS

MULTILANE UNDIVIDED (RURAL) HIGHWAYS

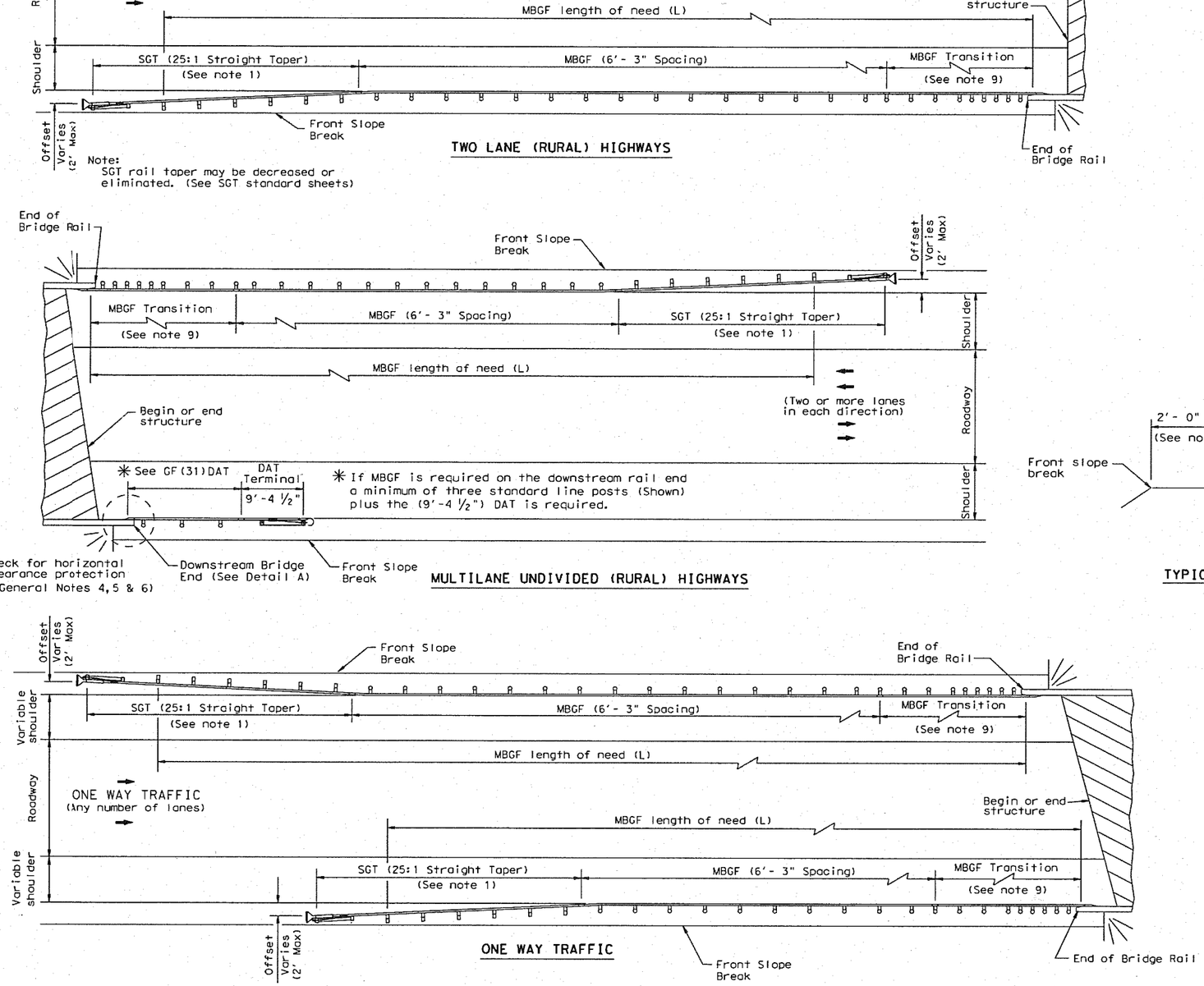

ONE WAY TRAFFIC

GENERAL NOTES

1. For more detail: See GF(31), SGT( )31, GF(31)TR, and GF(31)TL2 standard sheets.
2. Quantities of metal beam guard fence (MBGF) at individual bridge ends are as shown in the plans.
3. Use average daily traffic (ADT) for the current year to determine MBGF length of need in accordance with the Roadway Design Manual unless otherwise specified. Where significant traffic volume growth is anticipated on low volume (0-750 ADT) highways, use length determinations for the higher volume category.
4. MBGF may not be required to shield departure end of bridge unless other obstacles within the horizontal clearance limits or opposing traffic indicate a MBGF consideration.
5. Downstream anchor terminals (DAT) are only for downstream end anchorage use, outside the horizontal clearance area of opposing traffic.
6. Direct connection of MBGF to concrete rails are only for downstream rail connections outside the horizontal clearance area of opposing traffic. (This requires a minimum of three standard line posts plus the DAT terminal, See Detail A)
7. The crown shall be widened to accommodate MBGF. Typically the "front slope" break should be 2'- 0" from the back of the MBGF post. This applies to new construction on new alignment or where existing roadway cross section is to be widened to increase roadway width. This does not apply to rehabilitation work where existing roadway crown width is to be retained (See Typical Cross Section at MBGF).
8. For restrictive bridge widths: The MBGF should be properly transitioned from the existing bridge rail to the adjoining MBGF (See MBGF Transition Standards). Metal beam guard fence at these bridge location(s) shall be flared at the rate of 25:1 or flatter, and be of the length necessary to locate the terminal end at the 2 ft. "maximum" offset from the shoulder edge in the approach direction.
9. Transition length and post spacing will vary depending on the transition type. Transition type will be shown elsewhere in the plans.

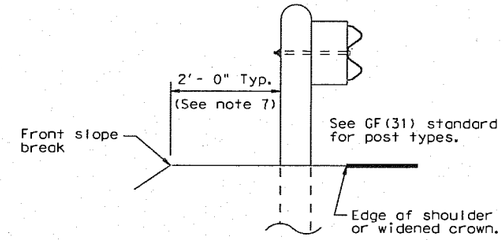

TYPICAL CROSS SECTION AT MBGF

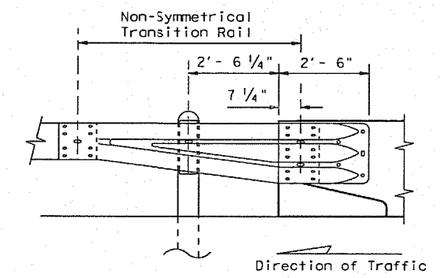

Note:
All rail elements shall be lapped in the direction of adjacent traffic.

DETAIL A

Showing Downstream Rail Attachment

Texas Department of Transportation
Design Division Standard

BRIDGE END DETAILS

(Metal Beam Guard Fence Applications to Rigid Rails)

BED-11

FILE: bed11.dgn	DN: TxDOT	CK: AM	DW: BD	CK:
© TxDOT December 2011	CONT	SECT	JOB	HIGHWAY
REVISIONS	0364	03	095	SH-121
	DIST		COUNTY	SHEET NO.
	DAL		DENTON	206

DISCLAIMER:
The use of this standard is governed by the "Texas Engineering Practice Act". No warranty of any kind is made by TxDOT for any purpose whatsoever. TxDOT assumes no responsibility for the conversion of this standard to other formats or for incorrect results or damages resulting from its use.

DATE:
FILE:

FILE NAME: J:\COLONY\SH-121\CAD\SHEETS\DETAILS\195-BED.DWG
SHEET SIZE: 11" X 17" 1" = 1'

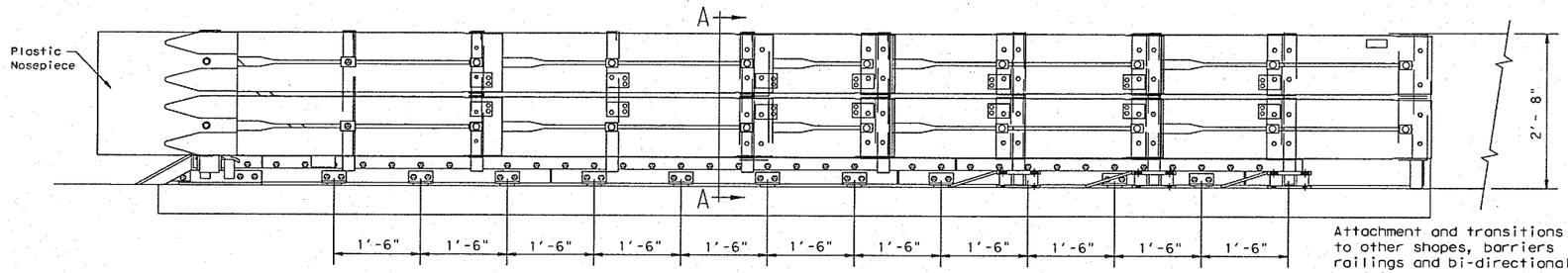

ELEVATION

Attachment and transitions to other shapes, barriers railings and bi-directional traffic flows are available. (See manufacturer's product manual)

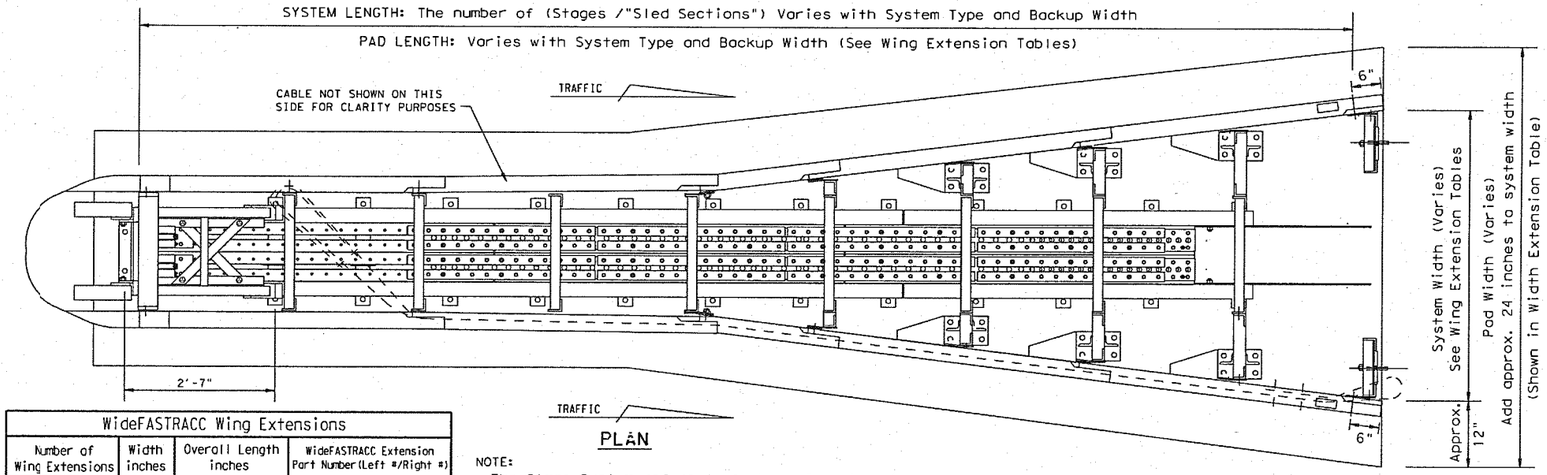

PLAN

NOTE:

The Stage System refers to number of replaceable "sled sections" that could be replaced independently.

Concrete pad length on the "WIDE" FASTRACC, TRACC & SHORTRACC depends on the System Length & Backup Type.

WideFASTRACC Wing Extensions			
Number of Wing Extensions	Width inches	Overall Length inches	WideFASTRACC Extension Part Number (Left #/Right #)
0 (BASE UNIT)	71	308	
1	78	336	33940
2	85	364	33941 / 33942
3	92	392	33943 / 33944
4	98	419	33945 / 33946
5	105	447	33947 / 33948
6	112	475	33949 / 33950
7	119	503	33951 / 33952
8	126	530	33953 / 33954
9	133	558	33955 / 33956
10	139	586	33957 / 33958
10+			CONSULT TRINITY SALES PERSON

WideTRACC Wing Extensions			
Number of Wing Extensions	Width inches	Overall Length inches	WideTracc Extension Part Number (Left #/Right #)
0 (BASE UNIT)	58	252	
1	65	280	33940
2	72	308	33941 / 33942
3	79	336	33943 / 33944
4	86	364	33945 / 33946
5	92	391	33947 / 33948
6	99	419	33949 / 33950
7	106	447	33951 / 33952
8	113	474	33953 / 33954
9	120	502	33955 / 33956
10	127	530	33957 / 33958
10+			CONSULT TRINITY SALES PERSON

WideSHORTRACC Wing Extensions			
Number of Wing Extensions	Width inches	Overall Length inches	WideSHORTRACC Extension Part Number (Left #/Right #)
0 (BASE UNIT)	39	169	
1	46	197	33940
2	53	225	33941 / 33942
3	60	253	33943 / 33944
4	66	281	33945 / 33946
5	73	308	33947 / 33948
6	80	337	33949 / 33950
7	87	364	33951 / 33952
8	94	391	33953 / 33954
9	101	419	33955 / 33956
10	108	447	33957 / 33958
10+			CONSULT TRINITY SALES PERSON

BACKUP SUPPORT OPTIONS
Square Concrete Backup
Concrete Barrier (CTB) Backup
Single Slope Concrete Barrier (SSCB)
Guardrail Backup (Base-Plated Post)
Guardrail Backup (Driven Post)
TRANSITION OPTIONS
Vertical Wall
Modified (CTB) to Vertical Wall
Concrete Barrier (CTB)
Guardrail (W-Beam)
Guardrail (Thrie-Beam)

Backup and Transition types are shown elsewhere on the plans, (i.e. Attenuator location details or in the general notes).
For bi-directional transition panel details (See manufactorer's product manual).

FOUNDATION OPTIONS
6" Reinforced Concrete
8" Unreinforced Concrete
3" Min. Asphalt over 3" Min. Concrete
6" Asphalt over 6" Compact Subbase
8" Minimum Asphalt

For steel placement in concrete foundations (See manufacturer's product manual)

TYPE (WIDE)	DESIGN SPEED (mph)
FASTRACC (4 Stage System)	70
TRACC (3 Stage System)	50 or greater
SHORTRACC (2 Stage System)	45 or less

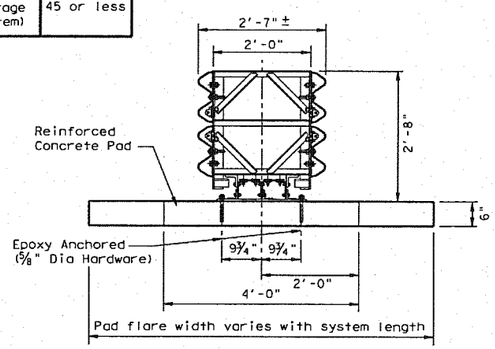

SECTION A-A

GENERAL NOTES

1. For custom widths, 31 inches to 57 inches wide. Contact Trinity Industries 1-800-527-6050, Ext. 8249.
2. For bi-directional traffic, appropriate transition panels will be required.
3. Details of components for the WideTRACC and backups and reinforcing details will be shown on the manufacturer's shop drawings furnished to the Engineer.
4. Concrete shall be class "S" with a minimum compressive strength of 4,000 p.s.i.
5. If the cross-slope varies more than 2% over the length of the system, the concrete pad will require leveling. Maximum permissible cross-slope is 8%.
6. The installation area should be free from curbs, elevated objects, or depressions.
7. The WideTRACC system should be approximately parallel with the barrier or ℄ of merging barriers.
8. The Unit shown is flared on both sides, but can be flared on a single side ether left or right. The flares will effect the length and width of the system. (See Wing Extension Tables)

WideTRACC BILL OF MATERIAL				
	FAST TRACC	TRACC	SHORT TRACC	DESCRIPTION
PART #	QTY	QTY	QTY	
25937A	1			WideFASTRACC Unit Assembly
25939A		1		WideTRACC Unit Assembly
25997A			1	WideSHORTRACC Unit Assembly
3310G	4	4	4	5/8" Lockwasher
4372G	4	4	4	5/8" Flatwasher
4451G	4	4	4	5/8" Dia x 6" Exp. Wedge Anchor
6531B	1	1	1	Plastic Nosepiece
6668B	4	4	4	Reflective Sheeting
ANCHOR HARDWARE (CONCRETE BASE)				
5204B	72	50	18	5/8"Dia x 7 1/16"Thd Anchor Stud
4372G	72	50	18	5/8" Flatwasher
3310G	72	50	18	5/8" Lockwasher
3361G	72	50	18	5/8" Hex Nut
5206B	6	4	2	Adhesive, Hilti Hit HY-150
ANCHOR HARDWARE (ASPHALT BASE)				
6380G	72	50	18	5/8"Dia x 18" Thd Anchor Stud
4372G	72	50	18	5/8" Flatwasher
3310G	72	50	18	5/8" Lockwasher
3361G	72	50	18	5/8" Hex Nut
5206B	15	11	4	Adhesive, Hilti Hit HY-150
ANCHOR HARDWARE (OPTIONAL ITEMS, AS NEEDED)				
5207B	A/R	A/R	A/R	Nozzle, Mixer, Hilti Hit HY-150
5208B	A/R	A/R	A/R	Ext. Tube, Mixer, Hilti Hit HY-150
5205B	A/R	A/R	A/R	Dispenser Gun, Hilti Hit HY-150
5209B	A/R	A/R	A/R	Drill Bit, 11/16", Hilti SDS

Texas Department of Transportation
Design Division (Roadway)

TRINITY ATTENUATING CRASH CUSHION

(WIDE TRACC Systems)
(FASTRACC, TRACC, SHORTRACC)

TRACC(W)-05

FILE: traccw05.dgn	DN:	CK: AM	DW: BGD	CK:	
©TxDOT February 2003	DISTRICT	FEDERAL AID PROJECT			SHEET
REVISIONS	DAL				207
	COUNTY		CONTROL	SECT	JOB	HIGHWAY
	DENTON		0364	03	095	SH-121

DISCLAIMER:
The use of this standard is governed by the "Texas Engineering Practice Act". No warranty of any kind is made by TxDOT for any purpose whatsoever. TxDOT assumes no responsibility for the conversion of this standard to other formats or for incorrect results or damages resulting from its use.

LEVELS DISPLAYED

FILE NAME: J:\COLDWA\SH-121\CAD\SHEETS\DETAILS\171-ATTENUATORS.DWG
SHEET SIZE: 11" X 17" 1" = 1'

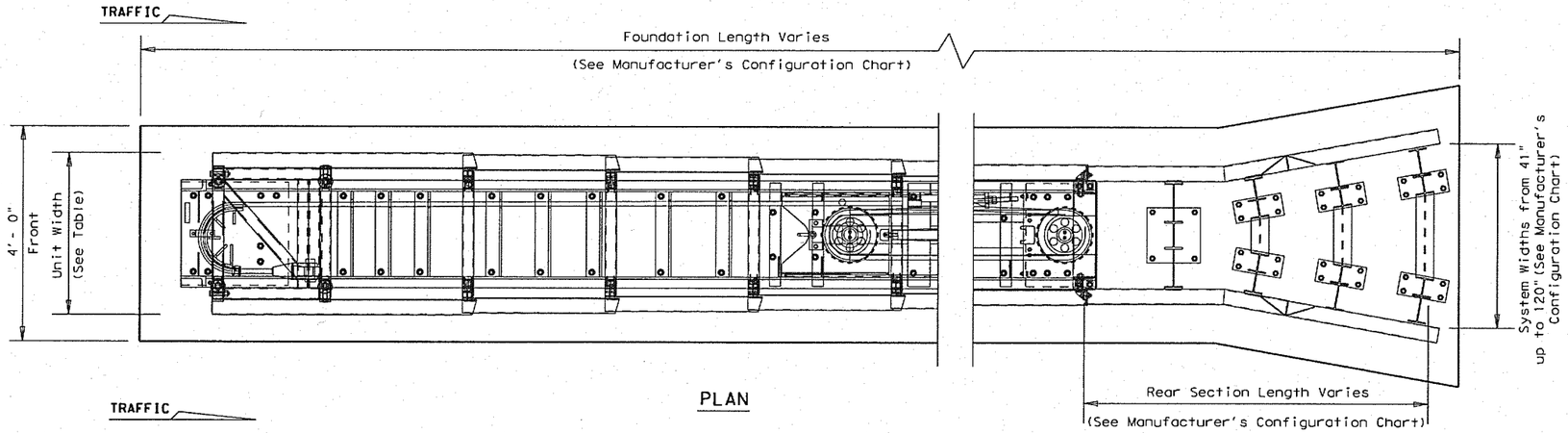

PLAN

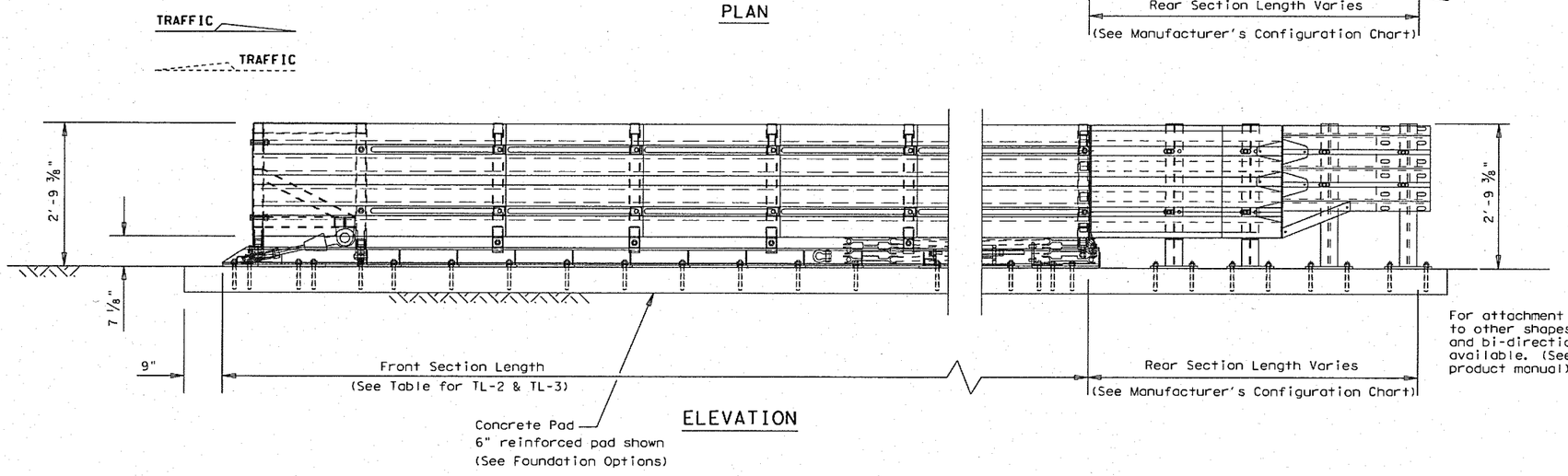

ELEVATION

For attachment and transitions to other shapes, barriers railings and bi-directional traffic flows are available. (See manufacturer's product manual)

For steel placement in concrete foundations, See Manufacturer's drawings

GENERAL NOTES

1. For additional information contact SCI Products Inc. (717)234-3106.
2. For bi-directional traffic, appropriate transition panels will be required.
3. Additional details for the backup support options, transition options and foundation options will be shown on the manufacturer's shop drawings furnished to the Engineer.
4. Concrete shall be class "S" with a minimum compressive strength of 4,000 p.s.i.
5. Maximum permissible cross-slope is 8%.
6. The installation area should be free from curbs, elevated objects, or depressions.
7. The SCI100GM & SCI70GM systems should be approximately parallel with the barrier or ℄ of merging barriers.

MODEL (WIDE)	DESIGN	FRONT SECTION LENGTH	UNIT WIDTH	FOUNDATION LENGTH	OBSTACLE WIDTH
SCI70GM	TL-2	13'-8 1/4"	Varies	Varies	41" to 120"
SCI100GM	TL-3	21'-8 1/4"	Varies	Varies	41" to 120"

System and pad lengths vary depending on backup type.

FOUNDATION OPTIONS
6" Reinforced Concrete (5 1/2" Anchor Embedment)
8" Unreinforced Concrete (5 1/2" Anchor Embedment)
3" Min. Asphalt over 3" Min. Concrete (16 1/2" Anchor Embed.)
6" Asphalt over 6" Compact Subbase (16 1/2" Anchor Embed.)
8" Minimum Asphalt (16 1/2" Anchor Embedment)

For steel placement in concrete foundations, see manufacturer's product manual.

BACKUP SUPPORT OPTIONS
Compact Steel Backup (Stand alone)

TRANSITION OPTIONS
Concrete Vertical Wall
Concrete Traffic Barriers
Guardrail (W-Beam)
Guardrail (Thrie-Beam)

Backup and Transition types are shown elsewhere on the plans, (i.e. Attenuator location details or in the general notes).

For bi-directional transition panel and end shoe details, see manufacturer's product manual.

NOTE: Side Panels can travel 30" beyond the last terminal brace at the rear of the cushion. All objects that may interfere with this motion can affect performance of and may cause undue damage to the crash cushion.

DISCLAIMER:
The use of this standard is governed by the "Texas Engineering Practice Act". No warranty of any kind is made by TxDOT for any purpose whatsoever. TxDOT assumes no responsibility for the conversion of this standard to other formats or for incorrect results or damages resulting from its use.

LEVELS DISPLAYED

FILE NAME: J:\COLDWY\SH-121\CAD\SHEETS\DETAILS\171-ATTENUATORS.DWG
SHEET SIZE: 11" X 17" 1" = 1'

Texas Department of Transportation
Design Division (Roadway)

CRASH CUSHION ATTENUATOR

(SMART CUSHION "WIDE")

SCI Products Inc.

SMTC(W)-06

FILE: smtcw06.dgn	DN: SCI	CK:	DW: BD	CK:	
© TxDOT February 2006	DISTRICT	FEDERAL AID PROJECT			SHEET
REVISIONS	DAL				208
	COUNTY		CONTROL	SECT	JOB	HIGHWAY
	DENTON		0364	03	095	SH-121

DISCLAIMER: The use of this standard is governed by the "Texas Engineering Practice Act". No warranty of any kind is made by TxDOT for any purpose whatsoever. TxDOT assumes no responsibility for the conversion of this standard to other formats or for incorrect results or damages resulting from its use.

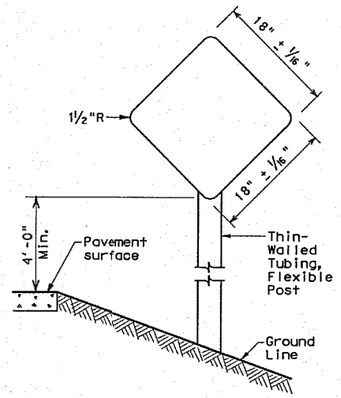

TYPE 1
18" x 18"
Yellow
Type E Sheeting

TYPE 4
18" x 18"
Red
Type D Sheeting

Use Sign blank 0.080" thick sheet aluminum conforming to ASTM B-209 Alloy 6061-T6. Use reflective sheeting in accordance with DMS 8300.

TYPES 1 and 4

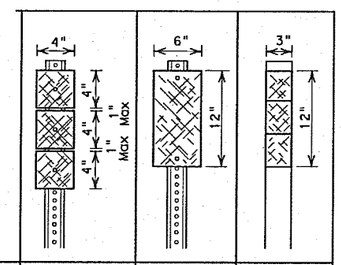

Number of Reflectors	X	Y	Z
Post	WC	WC	FLX

NOTES

1. All type 2 object markers are yellow
2. WC-wing channel post, 1.12 lbs/ft steel per ASTM A 1011 SS Gr 50, or ASTM A499
3. FLX-flexible post (embedded and surface mount)

Typically used on bridge rail approach ends, some bridge abutments and at bridge rail exits on two-lane, two-way roadways

TYPE 2

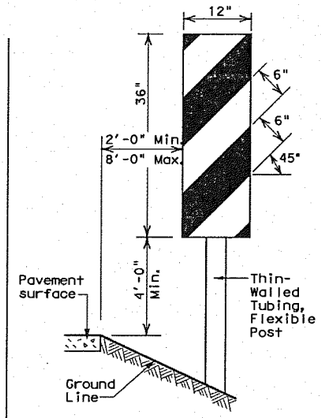

OM-3 Directions

L - Placed on Left Side
R - Placed on Right Side
C - Placed on Center

Use Sign blank .080" thick sheet aluminum conforming to ASTM B-209 Alloy 6061-T6. Use reflective sheeting in accordance with DMS 8300, Type E. Use at bridges with no approach rails.

TYPE 3

OBJECT MARKERS

	SINGLE		DOUBLE	
	D-SY, D-SR or D-SW		D-DY or D-DW	
Number of Reflectors	S		D	
Post	WC	FLX	WC	FLX

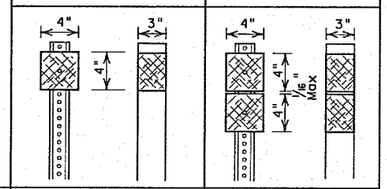

NOTES

1. Reflector Units: W-White, R-Red, Y-Yellow
2. Length of post may vary to meet field conditions.
3. WC-wing channel post, 1.12 lbs/ft Steel per ASTM A 1011 SS Gr 50, or ASTM A499
4. FLX-flexible post (embedded and surface mount)

DELINEATORS

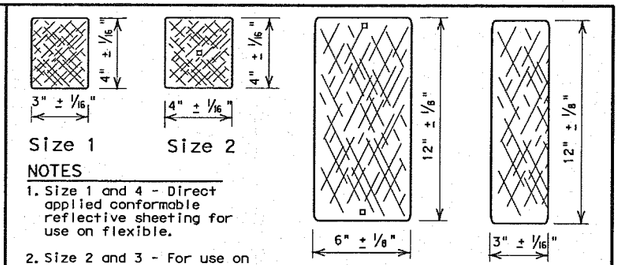

NOTES

1. Size 1 and 4 - Direct applied conformable reflective sheeting for use on flexible.
2. Size 2 and 3 - For use on Wing Channel post only. Use approved metal, plastic or fiberglass backplate with 17/64" square mounting holes.
3. Yellow, White & Red: Conformable Reflective Sheeting as per DMS 8300.

REFLECTOR UNIT SIZES

NOTES

1. A reflector unit or sheeting (per DMS 8600) attached to a bracket to facilitate the mounting of the reflector on concrete traffic barrier, railing, metal beam guard fence (MBGF) or other locations shown on the plans. A list of appoved barrier reflectors can be found at: www.txdot.gov
2. Yellow, White and Red: Conformable Reflective Sheeting as per DMS 8300.

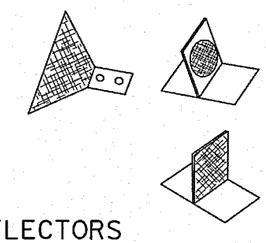

BARRIER REFLECTORS

D & OM DESCRIPTIVE CODES

INSTL DEL ASSM (D-XX)SZ X (XXX)XXX(XX)

NUMBER OF REFLECTORS
S = Single
D = Double

COLOR OF REFLECTORS
W = White
Y = Yellow
R = Red

REFLECTOR UNIT SIZE
1 or 2

TYPE OF POST OR DELINEATOR
WC = Wing Channel Post
FLX = Flexible Post
TYC = Barrier Reflector

TYPE OF MOUNT
GND = Embedded (drivable or set in concrete)
CTB = Concrete Barrier Mount
GF1 or GF2 = Guard Fence Attachment
SRF = Surface Mount

DIRECTION
If Required
BI = Bi-Directional
BR = Bi-Directional with red on back

INSTL OM ASSM (OM-XX) (XXX)XXX(XX)

TYPE OF OBJECT MARKER
1, 2, 3, or 4

NUMBER OF REFLECTORS OR DIRECTION
X = 3-Size 2 reflector units (Type 2 only)
Y = 1-Size 3 reflector unit (Type 2 only)
Z = 3-Size 1 or 1-Size 4 reflector unit(s) (Type 2 only)
L = Left Side (Type 3 Object Marker only)
R = Right Side (Type 3 Object Marker only)
C = Center (Type 3 Object Marker only)

TYPE OF POST
WC = Wing Channel Post
FLX = Flexible Post
TWT = Thin Walled Tubing

TYPE OF MOUNT
GND = Embedded (drivable or set in concrete)
SRF = Surface Mount

DIRECTION
If Required
BI = Bi-Directional

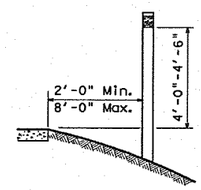

TYPICAL INSTALLATION

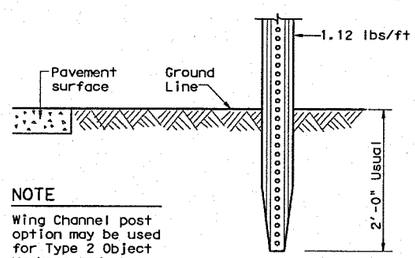

NOTE

Wing Channel post option may be used for Type 2 Object Markers and delineators only.

WING CHANNEL

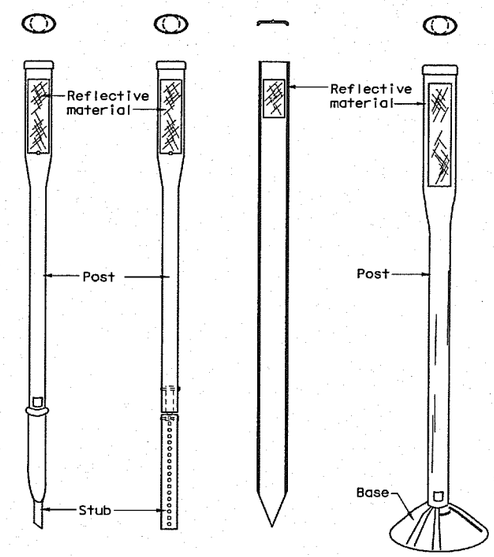

EMBEDDED

SURFACE MOUNT

NOTES

1. See Material Producer List for approved devices.
2. Install to manufacturer's recommenations.

FLEXIBLE POSTS

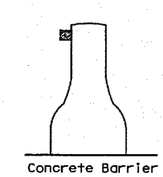

Concrete Barrier

CTB

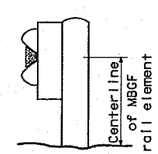

GF1

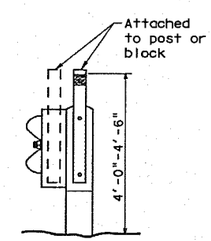

GF2

BARRIER REFLECTORS

GENERAL NOTES

1. Place delineators on a section of roadway the same distance from the edge of pavement.
2. Where a restriction prevents consistent placement from the pavement edge, place the affected object markers in line with the innermost edge of the obstruction.
3. When object markers are more than 8'-0" from the edge of the pavement, it may not be possible to maintain a height of 4'-0"-4'-6". If this is the case, place the object markers as close to the desired height as possible.
4. Install all delineators, object markers and barrier reflectors in accordance with the manufacturer's recommendation.

DEPARTMENTAL MATERIAL SPECIFICATIONS	
FLEXIBLE DELINEATOR & OBJECT MARKER POSTS (EMBEDDED & SURFACE MOUNT TYPES)	DMS-4400
SIGN FACE MATERIALS	DMS-8300
DELINEATORS AND OBJECT MARKERS	DMS-8600

Texas Department of Transportation
Traffic Operations Division

DELINEATOR & OBJECT MARKER INSTALLATION AND MATERIAL DESCRIPTION D & OM(1)-10

© TxDOT August 2004

REVISIONS	DN: TXDOT	CK: TXDOT	DW: TXDOT	CK: TXDOT
10-09	CONT	SECT	JOB	HIGHWAY
4-10	0364	03	095	SH-121
	DIST		COUNTY	SHEET NO.
	DAL		DENTON	209

20A

PLOTTED ON: 3/11/2013 10:00 AM
FILE NAME: J:\COLONY\SH-121\CAD\SHEETS\DETAILS\203-DOM.DWG
SHEET SIZE: 11" X 17" 1" = 1"
DATE:
FILE:

DISCLAIMER: The use of this standard is governed by the "Texas Engineering Practice Act". No warranty of any kind is made by TxDOT for any purpose whatsoever. TxDOT assumes no responsibility for the conversion of this standard to other formats or for incorrect results or damages resulting from its use.

Type of Road or Condition		Condition for use: Required (shall be used)	Recommended (should be used)	Optional (may be used)	Prohibited (cannot be used)	Delineator Spacing
Freeways or Expressways	Tangent	D-SW on right or raised pavement markers				200-530 ft
	Curve	D-SW on right				see Table
	Ramp	D-SW on one side See Note 1 *	On outside of interchange ramp curves			
Other Than Freeways or Expressways	Tangent			D-SW on right or left side	D-SY or D-DY on left side of two-way roads	200-530 ft
	Curve					see Table
Acceleration and Deceleration Lanes			D-DW or D-DY			100 ft spacing
Crossovers			D-DY on left side of through road on far side of crossover			
Wrong-way				D-SR for wrong-way traffic		
Pavement Narrowing (lane merge)				D-SW (right) or D-SY (left) adjacent to affected lane for full length of transition See Note 2 **		
Truck escape ramps			D-SR on both sides of ramp			50 ft spacing
With guard fence, bridge rail, or concrete barrier						100 ft use min. of 3

General Notes: Unless indicated otherwise, the color of a delineators must conform to the color of the pavement edge line on the side of the road where the delineators are placed. Barrier markers can be used to replace required delineators. DS-R can be mounted on the back side of existing delineator posts.

* 1. Delineation required on one side either SY or SW.

** 2. Minimum of 3.

When degree of curve or radius is known

When degree of curve or radius is not known

Advisory Speed (MPH)	Spacing in Curve	Spacing in Strtawy	Chevron Spacing in Curve
	A	2xA	B
65	130	260	
60	110	220	
55	100	200	160
50	85	170	160
45	75	150	160
40	70	140	120
35	60	120	120
30	55	110	80
25	50	100	80
20	40	80	80
15	35	70	40

If the degree of curve is not known, delineator spacing may be determined based on the Advisory Speed of the curve. Use the delineator curve spacing for each Advisory Speed (MPH).

Degree of Curve	Feet: Radius of Curve	Spacing in Curve	Spacing in Strtawy	Chevron Spacing in Curve
		A	2A	B
1	5730	225	450	
2	2865	160	320	
3	1910	130	260	
4	1433	110	220	
5	1146	100	200	160
6	955	90	180	160
7	819	85	170	160
8	716	75	150	160
9	637	75	150	120
10	573	70	140	120
11	521	65	130	120
12	478	60	120	120
13	441	60	120	120
14	409	55	110	80
15	382	55	110	80
16	358	55	110	80
19	302	50	100	80
23	249	40	80	80
29	198	35	70	40
38	151	30	60	40
57	101	20	40	40

Curve delineator approach and departure spacing should include 3 delineators spaced at 2A. This spacing should be used during design preparation or when the degree of curve is known.

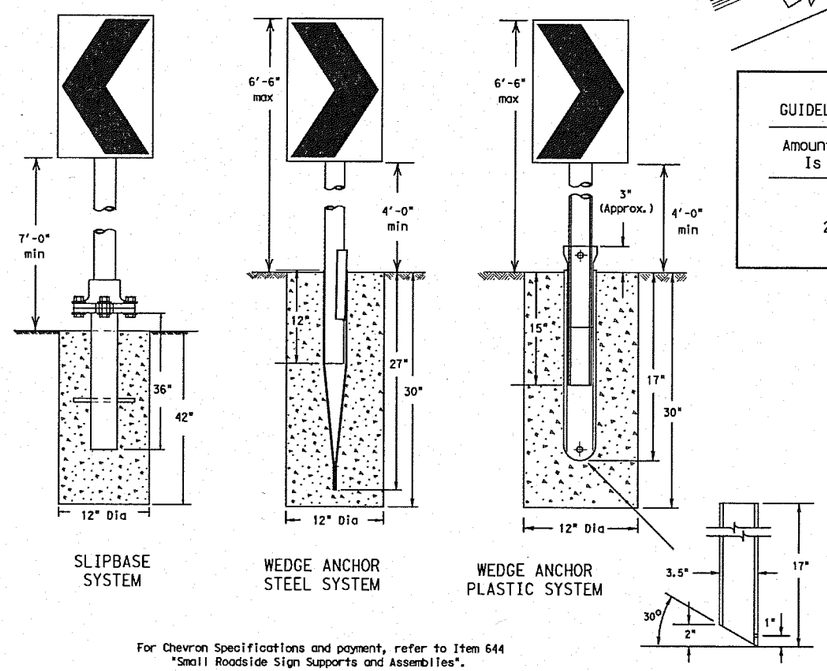

For Chevron Specifications and payment, refer to Item 644 "Small Roadside Sign Supports and Assemblies".

Suggested Spacing for Highway Delineators on Horizontal Curves △

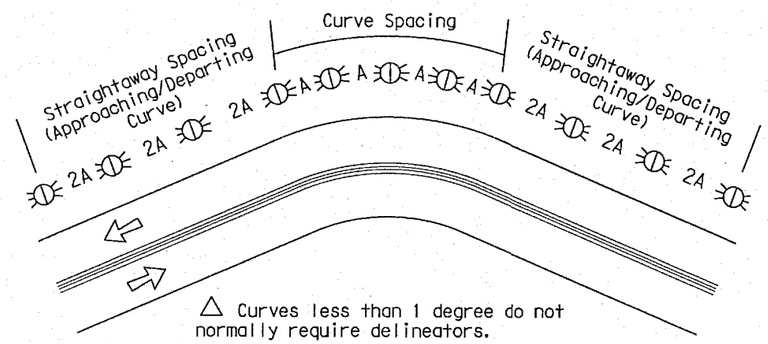

△ Curves less than 1 degree do not normally require delineators.

Suggested Spacing for Chevrons on Horizontal Curves △

The Chevron may be used to provide additional emphasis and guidance for a change in horizontal alignment. A Chevron may be used as a supplement to delineation.

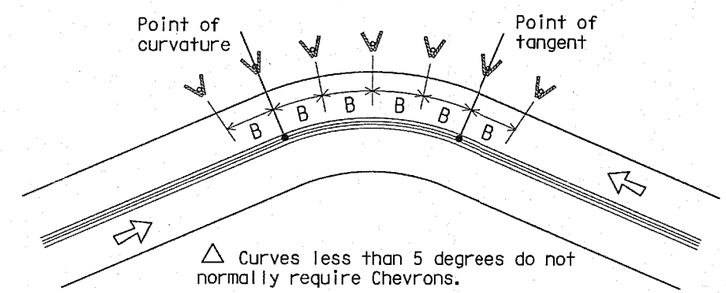

△ Curves less than 5 degrees do not normally require Chevrons.

GUIDELINES FOR USE OF WARNING DEVICES AT CURVES WITH ADVISORY SPEED LIMITS

Amount by which Advisory Speed Is less than Posted Speed	Warning Devices Needed
0 to 14 MPH	RPMs
15 to 24 MPH	RPMs and Delineators
25 MPH or greater	RPMs and Chevrons

Texas Department of Transportation
Traffic Operations Division

TYPICAL DELINEATOR & OBJECT MARKER PLACEMENT DETAILS

D & OM(2)-04

© TxDOT August 2004

REVISIONS

FILE: TXDOT	CK: TXDOT	DW: TXDOT	CK: TXDOT
CONT	SECT	JOB	HIGHWAY
0364	03	095	SH-121
DIST		COUNTY	SHEET NO.
DAL		DENTON	210

20B

DATE:
FILE:

PLOTTED ON: 3/11/2013 10:03 AM
FILE NAME: u:\COLORY\SH-121\CAD\SHEETS\DETAILS\203-DOM.DWG
SHEET SIZE: 11" X 17" 1" = 1"

DISCLAIMER: The use of this standard is governed by the "Texas Engineering Practice Act". No warranty of any kind is made by TxDOT for any purpose whatsoever. TxDOT assumes no responsibility for the conversion of this standard to other formats or for incorrect results or damages resulting from its use.

Two-way, Two lane Roadway with Reduced Width Approach Rail

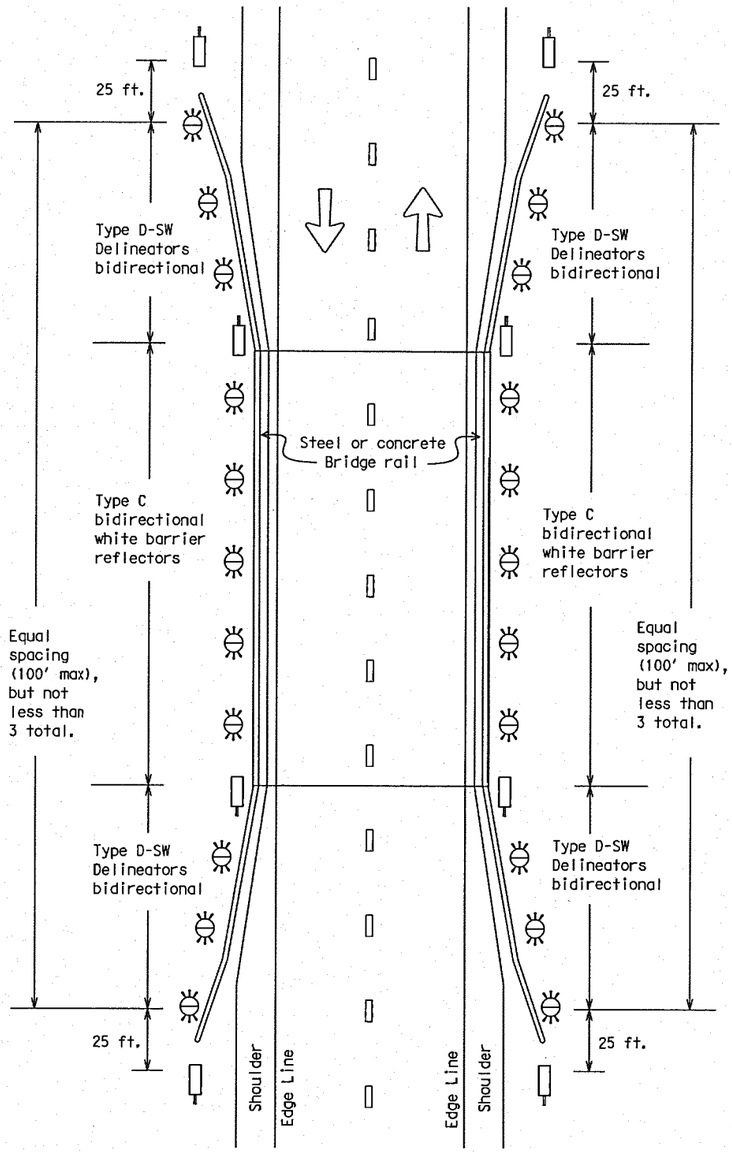

Two-way, Two lane Roadway with Metal Beam Guard Fence (MBGF)

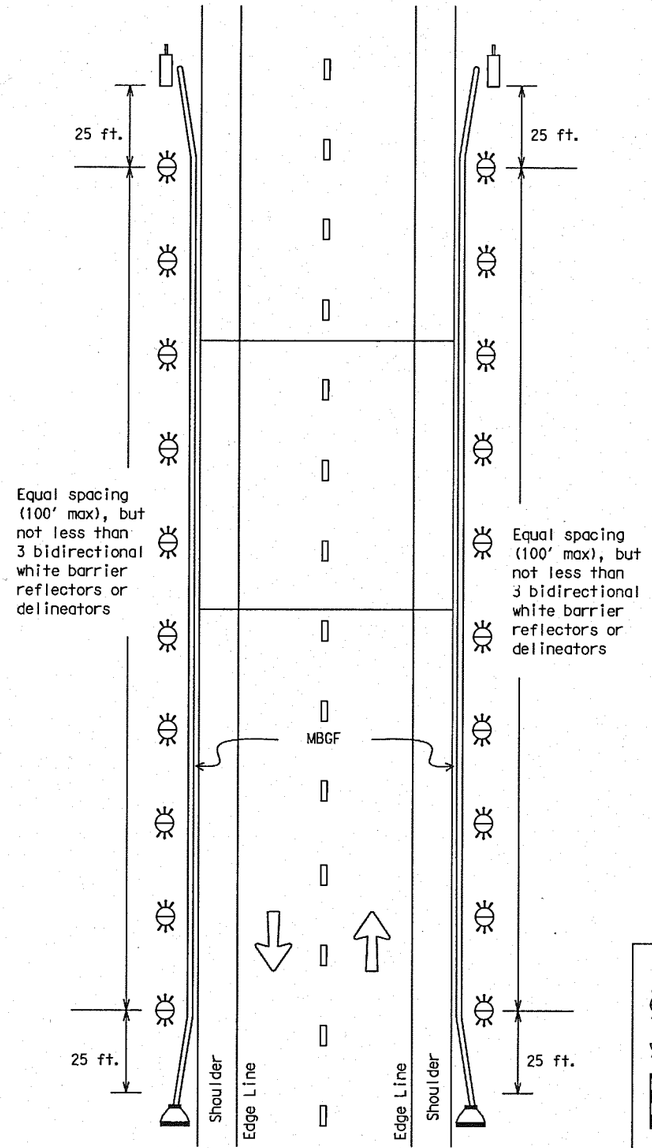

Two-way, Two lane Roadway Bridge with No Approach Rail

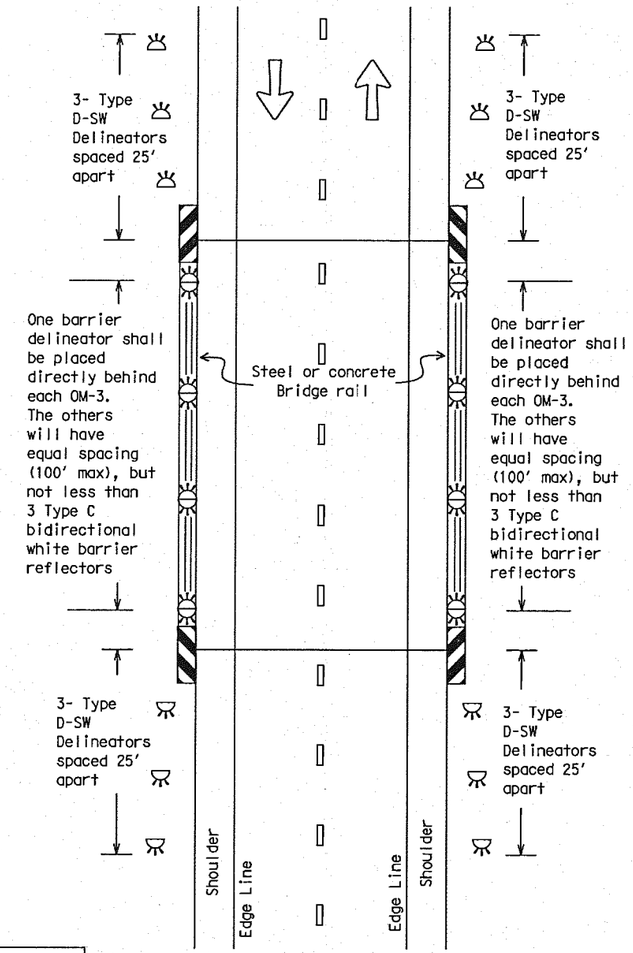

Terminal Ends include OB-3F.
There is no need to install an OM-2 in front of terminal.

LEGEND

- Bidirectional Delineator
- Delineator
- OM-3
- OM-2
- Terminal End

Texas Department of Transportation
Traffic Operations Division

DELINEATOR & OBJECT MARKER PLACEMENT DETAILS

D & OM(3)-04

©TxDOT August 2004

REVISIONS

DWN: TXDOT	CKD: TXDOT	DWN: TXDOT	CKD: TXDOT
CONT	SECT	JOB	HIGHWAY
0364	03	095	SH-121
DIST		COUNTY	SHEET NO.
DAL		DENTON	211

20C

PLOTTED ON: 3/11/2013 10:05 AM
FILE NAME: A:\COLONY\SH-121\CADD\SHEETS\DETAILS\203-DOWL.DWG
SHEET SIZE: 11" X 17" 1" = 1"
DATE:
FILE:

DISCLAIMER: The use of this standard is governed by the "Texas Engineering Practice Act". No warranty of any kind is made by TxDOT for any purpose whatsoever. TxDOT assumes no responsibility for the conversion of this standard to other formats or for incorrect results or damages resulting from its use.

Continuous Concrete Barrier

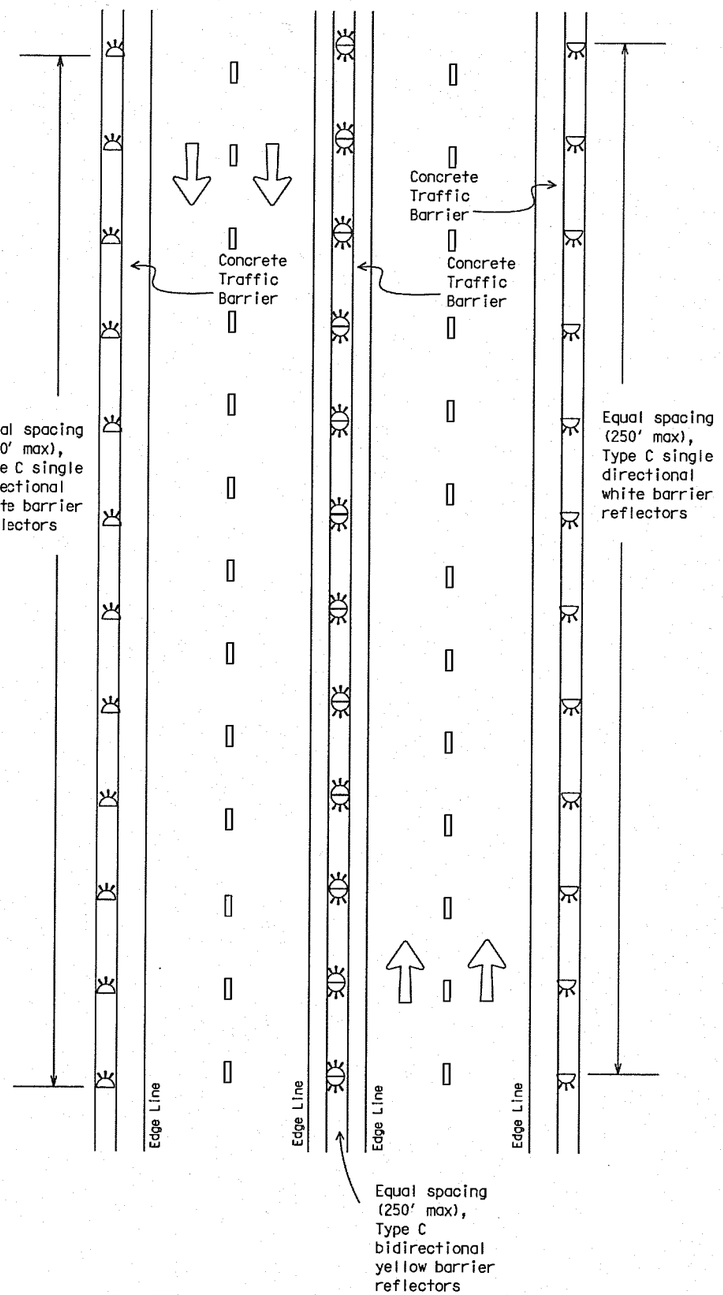

Multi-lane Undivided, Two-way Roadway with Metal Beam Guard Fence (MBGF)

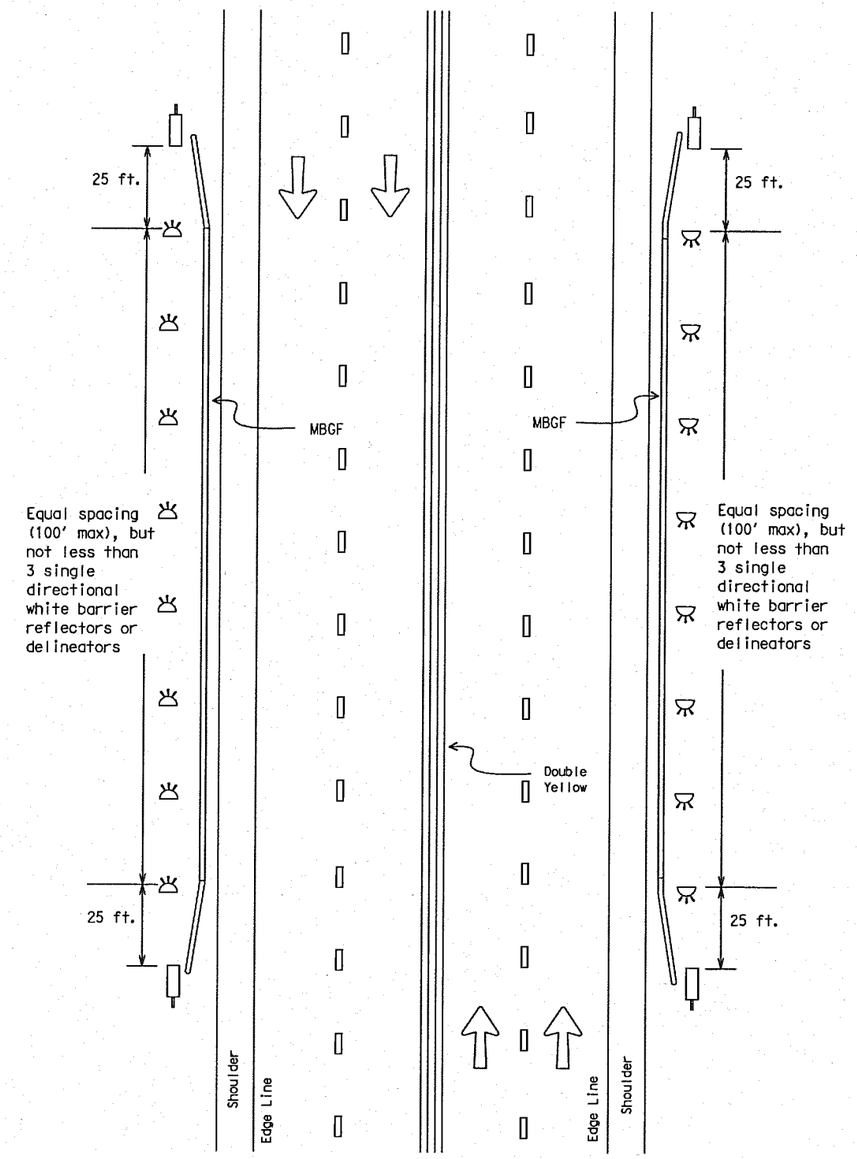

LEGEND

- Bidirectional Delineator
- Delineator
- OM-3
- OM-2

Texas Department of Transportation
Traffic Operations Division

DELINEATOR & OBJECT MARKER PLACEMENT DETAILS

D & OM(4)-04

© TxDOT August 2004

REVISIONS

DN: TXDOT	CK: TXDOT	DW: TXDOT	CK: TXDOT
CONT	SECT	JOB	HIGHWAY
0364	03	095	SH-121
DIST		COUNTY	SHEET NO.
DAL		DENTON	212

20D

DATE:
FILE:

PLOTTED ON: 3/11/2013 10:17 AM
FILE NAME: A:\COLONY\SH-121\CADD\SHEETS\DETAILS\203-DOM.DWG
SHEET SIZE: 11" X 17" 1' = 1'

DISCLAIMER: The use of this standard is governed by the "Texas Engineering Practice Act". No warranty of any kind is made by TxDOT for any purpose whatsoever. TxDOT assumes no responsibility for the conversion of this standard to other formats or for incorrect results or damages resulting from its use.

Divided Roadway with Metal Beam Guard Fence

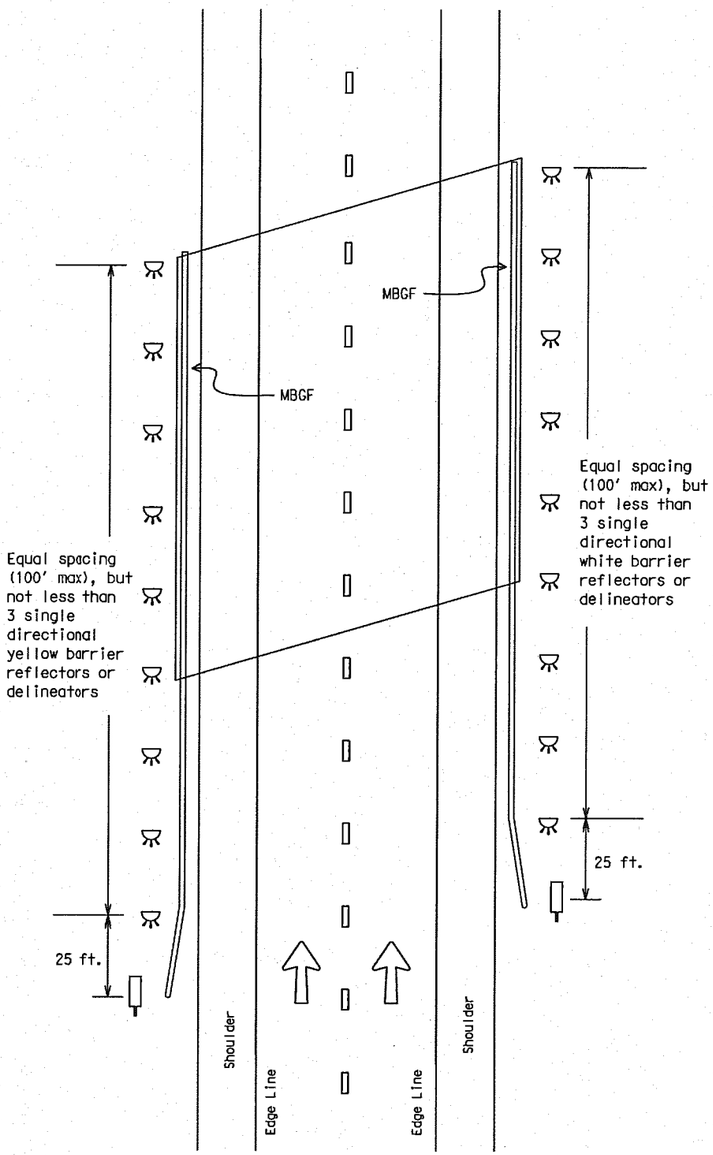

Freeway Delineation including Ramps

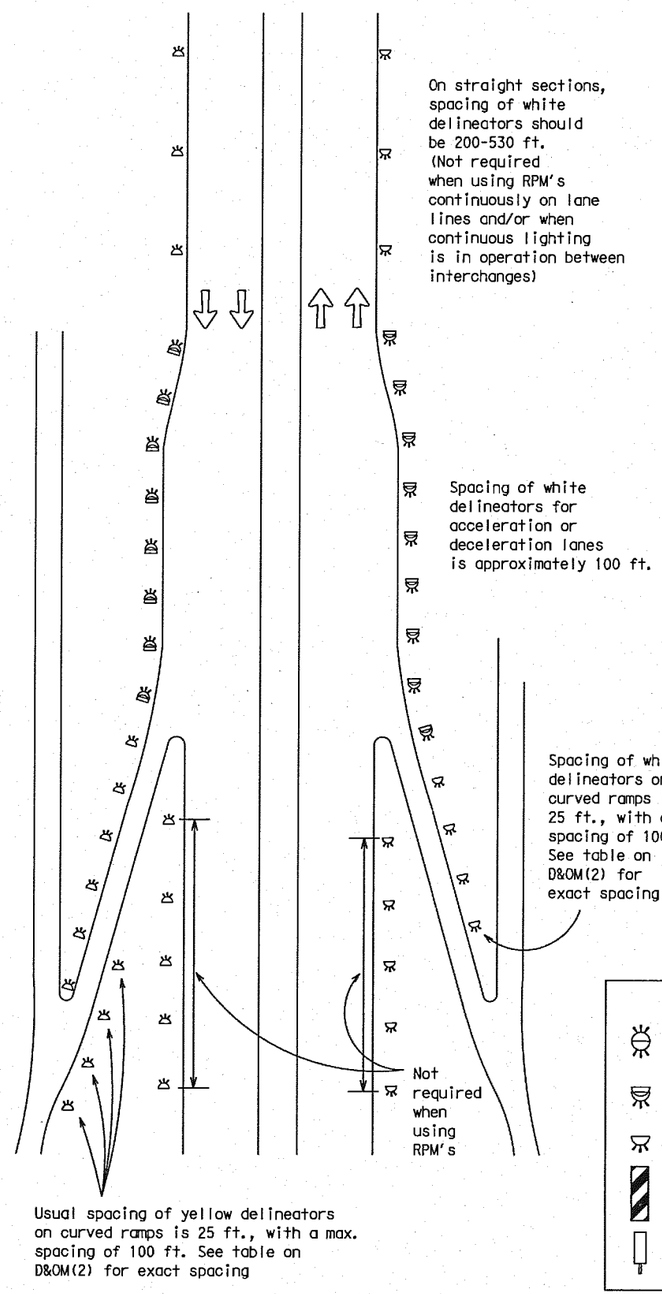

For Culverts without MBGF

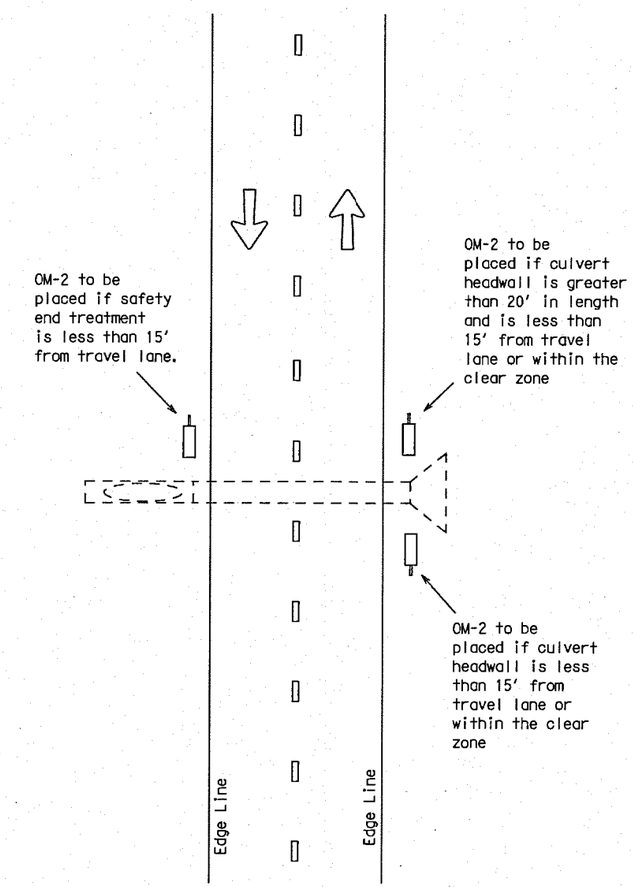

LEGEND

- Bidirectional Delineator
- Double Delineator
- Delineator
- OM-3
- OM-2

Texas Department of Transportation
Traffic Operations Division

DELINEATOR & OBJECT MARKER PLACEMENT DETAILS

D & OM(5)-04

© TxDOT August 2004

REVISIONS	DN: TXDOT	CK: TXDOT	DW: TXDOT	CK: TXDOT
	CONT	SECT	JOB	HIGHWAY
	0364	03	095	SH-121
	DIST		COUNTY	SHEET NO.
	DAL		DENTON	213

20E

DATE:
FILE:

PLOTTED ON: 3/11/2013 10:26 AM
FILE NAME: J:\DOLONY\SH-121\CAD\SHEETS\DETAILS\203-DOM.DWG
SHEET SIZE: 11" X 17" 1" = 1"

DISCLAIMER: The use of this standard is governed by the "Texas Engineering Practice Act". No warranty of any kind is made by TxDOT for any purpose whatsoever. TxDOT assumes no responsibility for the conversion of this standard to other formats or for incorrect results or damages resulting from its use.

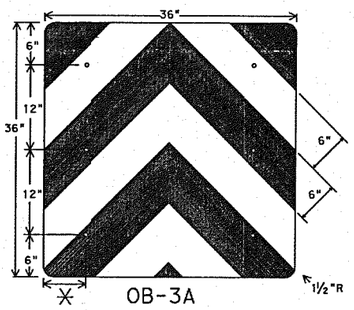

OB-3A

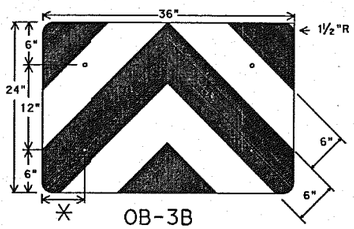

OB-3B

✳ adjust to fit attenuator per manufacturer's recommendation, or as directed by the Engineer.

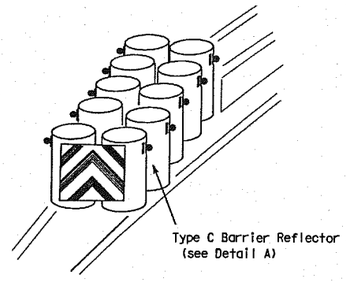

Object Marker blank to be 0.08" thick sheet aluminum conforming to ASTM B-209 Alloy 6061-T6 aluminum as per Specification DMS 7110.

Mounting should be flush with top of VIA. Minimum size 36" x 24".

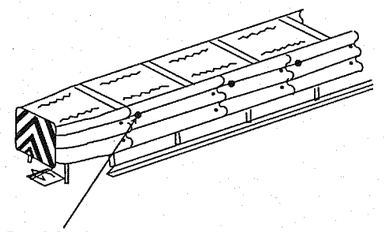

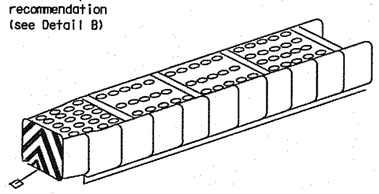

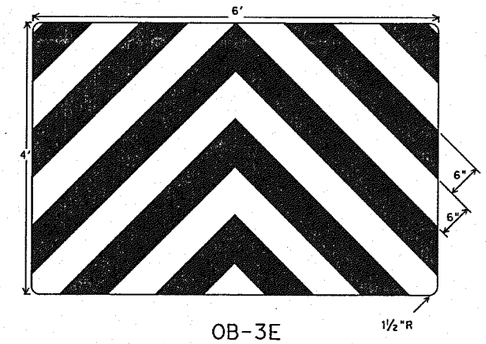

OB-3E

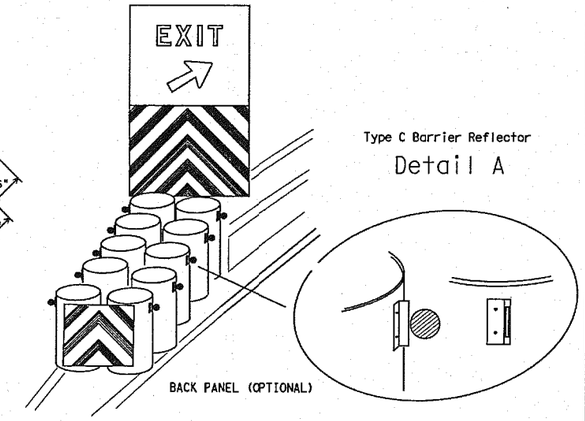

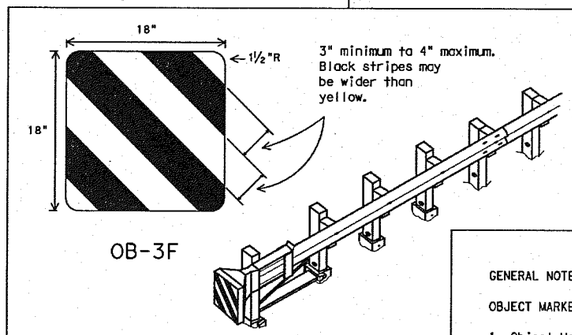

OB-3F

TYPICAL GUARDRAIL END TREATMENT

GENERAL NOTES:

1. Back panel will be mounted independent of the attenuator. The minimum mounting height is flush with the top of the attenuator.
2. Attenuator may have additional yellow reflective and black striping, and/or reflectors placed on sides. CHEVRONS (W1-8) may be erected to delineate roadway curvature beyond the attenuator. These additional devices will be installed if required elsewhere in the plans.
3. Mount Back Panel per details on SMD Standards, or as detailed elsewhere in the plans.

GENERAL NOTES:

OBJECT MARKERS

1. Object Markers shall conform to the Texas MUTCD and meet the color and reflectivity requirement of Department Material Specification DMS 8300, Type C. Background shall be yellow reflective and Chevron shall be black.
2. OB-3F is intended for use only with guardrail terminal ends. OM-BF may be fabricated from adhesive backed reflective sheeting applied directly to guardrail end treatment, or applied directly to an "end cap" as per the manufacturer's recommendation. Direct applied sheeting shall provide a smooth surface and have no wrinkles, air bubbles, cuts or tears.
3. Size may be reduced to fit smaller devices, however, the minimum size shall be:
   (a) 24 x 24 inch for attenuators, and
   (b) 18 x 18 inches for guardrail end treatments.
4. Pop rivets, screws, or nuts and bolts may be used to attach object markers and reflectors. Holes, slots or other openings may be cut or drilled through object markers to allow cable or other attachments.
5. When traffic passes only on one side of attenuator, only the OM-3 marker should be installed. OM-3 should be installed per the requirements of D & OM Standards with a minimum mounting height of 18 inches.

TYPE C REFLECTORS

1. Type C delineators shall consist of a Type A or Type B reflector unit (per DMS 8600) attached to a bracket to facilitate delineator mounting on attenuators, guardrails and concrete traffic barriers.
2. Type C reflectors may also be used to delineate side of attenuator, guardrail and concrete traffic barrier.
3. Type C reflectors shall meet the requirements of DMS 8600.

A list of approved Type C Delineators can be found at:

ftp//ftp.dot.state.tx.us/pub/txdot-info/cmd/mpl/typecdeln.pdf

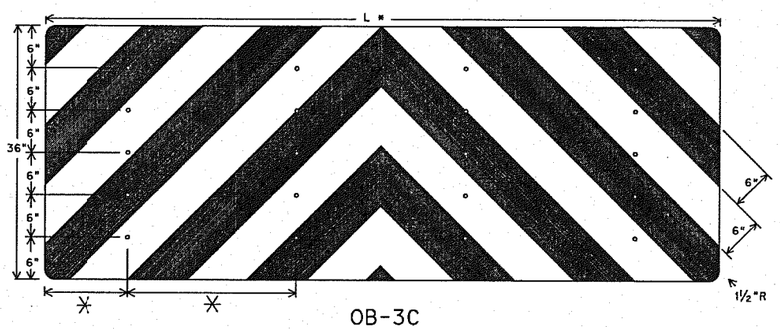

OB-3C

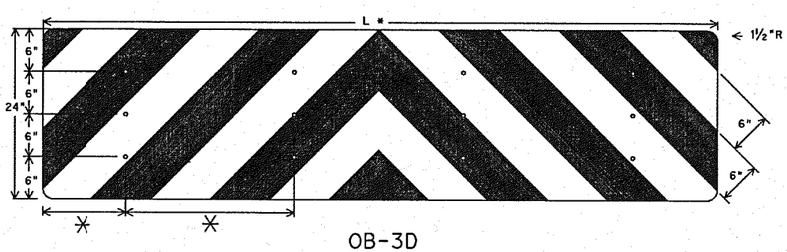

OB-3D

✳ spacing adjusted to attach through centerline of drum, per attenuator manufacturers recommendation, or as directed by the Engineer.

Mounting should be flush with top of attenuator. Minimum size 96" x 24".

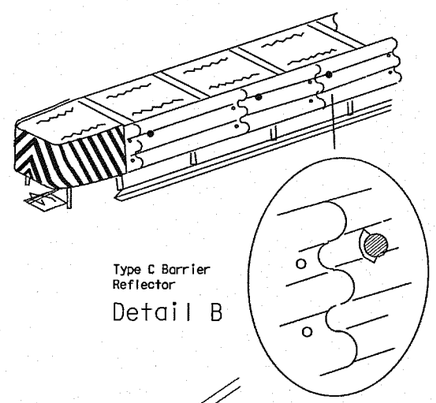

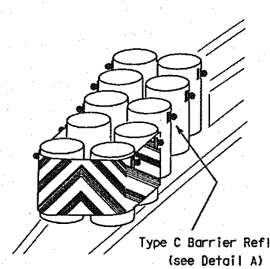

Texas Department of Transportation
Traffic Operations Division

DELINEATORS & OBJECT MARKERS FOR VEHICLE IMPACT ATTENUATORS

D & OM(VIA)-04

©TxDOT December 1989

DN: TXDOT	CK: TXDOT	DW: TXDOT	CK: TXDOT
CONT	SECT	JOB	HIGHWAY
0364	03	095	SH-121
DIST	COUNTY		SHEET NO.
DAL	DENTON		214

REVISIONS
4-92
8-95
4-98
8-04

20F

DATE:
FILE:

PLOTTED ON: 3/11/2013 10:22 AM
FILE NAME: J:\COLONY\SH-121\CAD\SHEETS\DETAILS\203-DOMLDWG
SHEET SIZE: 11" X 17" 1" = 1"